GENERAL NOTES

G1. THE INTENT OF THE STRUCTURAL DRAWINGS IS TO SHOW THE MAIN STRUCTURAL FEATURES AND DESIGN FOR THE COMPLETED PROJECT. ARCHITECTURAL DETAILS AND OTHER COMPONENTS THAT MAY BE NECESSARY TO CONSTRUCT THE PROJECT ARE SHOWN INCIDENTALLY ONLY AND NOT COMPLETELY. THEREFORE, ALL CONTRACT DRAWINGS AND SPECIFICATIONS MUST BE USED IN CONJUNCTION WITH THE STRUCTURAL DRAWINGS DURING ALL PHASES OF CONSTRUCTION. DISCREPANCIES BETWEEN STRUCTURAL DRAWINGS AND ARCHITECTURAL DRAWINGS, IF NOT CLARIFIED IN THE ADDENDA AT THE REQUEST OF THE CONTRACTOR, SHALL BE BROUGHT TO THE ATTENTION OF THE ARCHITECT DURING CONSTRUCTION FOR CLARIFICATIONS. THE CONTRACTOR SHALL TAKE THIS INTO CONSIDERATION IN HIS BID.

G2. THE CONTRACTOR SHALL INFORM THE ARCHITECT OF ALL DISCREPANCIES BETWEEN DRAWINGS OF DIFFERENT TRADES PRIOR TO INITIATION OF ANY WORK.

G3. THE DESIGN IS IN ACCORDANCE WITH THE NINTH EDITION OF THE MASSACHUSETTS STATE BUILDING CODE.

G4. THE CONTRACTOR SHALL BE COMPLETELY RESPONSIBLE FOR THE SAFETY OF ADJACENT STRUCTURES, PROPERTY, AND THE PUBLIC. THE CONTRACTOR SHALL SHORE, BRACE, AND PROTECT THE EXISTING BUILDING AS REQUIRED FOR CONSTRUCTION OF NEW WORK.

G.5 REFER TO ARCHITECTURAL, MECHANICAL, PLUMBING, AND ELECTRICAL DRAWINGS FOR VERIFICATION OF LOCATIONS AND DIMENSIONS OF ALL CHASES, SLOTS, INSERTS, CURBS, OPENINGS, SLEEVES, ANCHOR BOLTS, FLOOR PITCHES, ANGLE FRAMES, AND ALL OTHER PROJECT REQUIREMENTS NOT SHOWN ON STRUCTURAL DRAWINGS. WORK NOT INDICATED ON A PART OF THE DRAWINGS BUT REASONABLY IMPLIED TO BE SIMILAR TO THAT SHOWN AT CORRESPONDING LOCATIONS SHALL BE INCLUDED.

G6. DETAILS SHOWN AS TYPICAL ARE APPLICABLE TO ALL SIMILAR CONDITIONS.

G7. ALL CONTRACTORS ARE REQUIRED TO EXAMINE THE DRAWINGS AND SPECIFICATIONS CAREFULLY, VISIT THE SITE, AND FULLY INFORM THEMSELVES AS TO ALL EXISTING CONDITIONS AND LIMITATIONS, PRIOR TO SUBMITTING THE PROPOSAL. FAILURE TO VISIT THE SITE AND FAMILIARIZE THEMSELVES WITH THE EXISTING CONDITIONS AND LIMITATIONS WILL IN NO WAY RELIEVE THE SUCCESSFUL BIDDER FROM FURNISHING ANY MATERIALS OR PERFORMING ANY WORK IN ACCORDANCE WITH DRAWINGS AND SPECIFICATIONS WITHOUT ADDITIONAL COST TO THE OWNER.

G8. THE CONTRACTOR IS RESPONSIBLE FOR ALL CONSTRUCTION MEANS AND METHODS INCLUDING BUT NOT LIMITED TO TEMPORARY SHORING AND BRACING OF NEW AND EXISTING CONSTRUCTION TO MAINTAIN STRUCTURAL STABILITY FOR ALL CONDITIONS OF STATIC, DYNAMIC, GRAVITY, AND WIND LOADS DURING DEMOLITION PROCEDURES, REPAIR PROCEDURES, AND NEW CONSTRUCTION PROCEDURES THROUGHOUT THE DURATION OF THE CONSTRUCTION CONTRACT. THE CONTRACTOR IS RESPONSIBLE FOR ALL ASPECTS OF TEMPORARY SHORING INCLUDING ENGINEERING BY A PROFESSIONAL ENGINEER REGISTERED IN THE COMMONWEALTH OF MASSACHUSETTS. THE CONTRACTOR IS RESPONSIBLE FOR ALL CONSTRUCTIONRELATED SAFETY MEASURES.

G9. ANY ILLUSTRATION OR DESCRIPTION OF CONSTRUCTION SEQUENCING, TEMPORARY SHORING SEQUENCE, OR TEMPORARY SHORING SYSTEM, AS SHOWN ANYWHERE IN THE CONTRACT DOCUMENTS (DRAWINGS AND/OR SPECIFICATIONS) IS PROVIDED TO THE CONTRACTOR ONLY FOR ILLUSTRATION OF A POSSIBLE METHOD OR SEQUENCE OF ACCOMPLISHING THE WORK, TO DEMONSTRATE FEASIBILITY IN PRINCIPLE ONLY, UNLESS OTHERWISE NOTED. SUCH ILLUSTRATIONS OR DESCRIPTIONS OF CONSTRUCTION SEQUENCING OR TEMPORARY SHORING IN THE CONTRACT DOCUMENTS ARE DEEMED SUGGESTIONS FOR CONSIDERATION ONLY BY THE CONTRACTOR AND ARE NOT ENDORSED BY THE ARCHITECT OR ENGINEER AND ARE NOT INTENDED TO DICTATE TO THE CONTRACTOR CONSTRUCTION MEANS AND METHODS OR SEQUENCING FOR THE WORK, UNLESS OTHERWISE NOTED. THE SELECTION, DETAILS AND EXECUTION OF ALL CONSTRUCTION MEANS, METHODS AND/OR SEQUENCING OF THE CONSTRUCTION WORK ARE SOLELY THE CHOICE AND RESPONSIBILITY OF THE CONTRACTOR. SUCH ILLUSTRATIONS OR DESCRIPTIONS OF CONSTRUCTION SEQUENCING OR TEMPORARY SHORING IN THE CONTRACT DOCUMENTS ARE SHOWN ONLY FOR THOSE ASPECTS OF THE WORK WHERE COMPLEXITY, UNIQUE CONDITIONS, OR GLOBAL STABILITY (AS RELATED TO THE PROJECT) WARRANT NOTICE OF VERY SPECIAL ATTENTION REQUIRED BY THE CONTRACTOR. SUCH ILLUSTRATIONS OR DESCRIPTIONS OF CONSTRUCTION SEQUENCING OR TEMPORARY SHORING IN THE CONTRACT DOCUMENTS ARE NOT TO BE INTERPRETED IN ANY WAY AS LIMITING THE WORK REQUIRING SEQUENCING OR TEMPORARY SHORING TO ONLY THOSE ASPECTS ILLUSTRATED OR DESCRIBED. AS PART OF THE BASE CONTRACT WORK, THE CONTRACTOR SHALL IDENTIFY, PLAN FOR, ENGINEER AND DETAIL, AND PROVIDE ALL CONSTRUCTION SEQUENCING AND TEMPORARY SHORING AS NECESSARY TO SAFELY AND SUCCESSFULLY EXECUTE ALL THE WORK ENCOUNTERED FOR THIS PROJECT.

FOUNDATION NOTES

F1. THE FOUNDATION DESIGN IS BASED ON THE RECOMMENDATIONS PROVIDED IN THE GEOTECHNICAL ENGINEERING REPORT PREPARED BY LAHLAF GEOTECHNICAL CONSULTANTS, INC AUGUST 12, 2020. REFER TO BORING LOGS AND TEST PIT DATA IN THE SPECIFICATIONS FOR ADDITIONAL INFORMATION.

F2. FOOTINGS SHALL BEAR TYPICALLY ON STRUCTURAL FILL PLACED DIRECTLY OVER THE NATURAL SAND AND GRAVEL OR ON ROCK HAVING A MINIMUM BEARING CAPACITY OF 2 TONS PER SQUARE FOOT. REFER TO EARTHWORK SPECIFICATIONS FOR ADDITIONAL REQUIREMENTS.

F3. ALL BACKFILL UNDER STRUCTURAL SLABS, MATS, AND FOOTINGS WILL BE ENGINEERED STRUCTURAL FILL COMPACTED IN SPECIFIED LIFTS TO 95 PERCENT OF MAXIMUM DRY DENSITY, UNLESS OTHERWISE INDICATED OR SPECIFIED. REFER TO EARTHWORK SPECIFICATIONS FOR ADDITIONAL REQUIREMENTS.

F4. PROVIDE SHEETING, BRACING, AND UNDERPINNING AS REQUIRED TO PRESERVE ADJACENT STRUCTURES.

F5. FOUNDATIONS AND SLABS SHALL NOT BE POURED IN WATER OR ON FROZEN GROUND.

F6. VERIFY LOCATIONS AND REQUIREMENTS FOR INSERTS, SLEEVES, CONDUITS, EMBEDMENTS, AND PENETRATIONS WITH RESPECTIVE TRADES BEFORE PLACING CONCRETE.

F7. BLASTING SHALL BE COMPLETED BEFORE ANY CONCRETE IS PLACED.

F8. DOWELS FROM FOUNDATIONS INTO PIERS, PILE CAPS, COLUMNS, BUTTRESSES, OR WALLS SHALL BE THE SAME SIZE AND NUMBER AS REINFORCEMENT IN PIERS, COLUMNS, BUTTRESSES, OR WALLS ABOVE, EXCEPT AS OTHERWISE SHOWN.

F9. CONTRACTOR SHALL PROVIDE CONTINUOUS DRAINAGE BY MECHANICAL METHODS TO CONTROL SURFACE AND UNDERGROUND WATER, AS REQUIRED DURING CONSTRUCTION. REFER TO EARTHWORK SPECIFICATIONS FOR ADDITIONAL REQUIREMENTS.

F10. CONTRACTOR SHALL ENSURE THAT GROUND WATER LEVELS UNDER ADJACENT STRUCTURES AND PROPERTIES ARE NOT ALTERED. REFER TO EARTHWORK SPECIFICATIONS FOR ADDITIONAL REQUIREMENTS.

F11. ALL FOUNDATIONS UNITS (PIERS AND FOOTINGS) SHALL BE CENTERED UNDER SUPPORT MEMBERS, UNLESS NOTED OTHERWISE ON PLANS.

F12. COORDINATE UNDER FLOOR AND PERIMETER DRAIN REQUIREMENTS WITH ARCHITECTURAL, CIVIL, AND PLUMBING DRAWINGS.

F13. THE OWNER AND ENGINEER ASSUME NO RESPONSIBILITY FOR THE VALIDITY OF THE SUBSURFACE CONDITIONS DESCRIBED ON THE DRAWINGS, SPECIFICATIONS, BORING LOGS, OR TEST PITS. THIS DATA IS INCLUDED ONLY TO ASSIST THE CONTRACTOR DURING BIDDING AND SUBSEQUENT CONSTRUCTION AND REPRESENT CONDITIONS ONLY OF THOSE SPECIFIED LOCATIONS AT THE PARTICULAR TIME THEY WERE MADE.

F14. CONTRACTOR SHALL INFORM THE ARCHITECT AND RELOCATE ANY EXISTING UTILITY LINES AS REQUIRED THAT MAY INTERFERE WITH NEW FOUNDATIONS. CONTRACTOR SHALL REMOVE ANY EXISTING UTILITY LINES THAT ARE BEING ABANDONED IN THE VICINITY OF THE NEW FOUNDATION AND BACKFILL THE AREA WITH COMPACTED STRUCTURAL FILL.

F15. SEE THE PROJECT SPECIFICATIONS FOR ADDITIONAL INFORMATION AND OTHER SPECIFIC FOUNDATION CONSTRUCTION REQUIREMENTS.

REINFORCED CONCRETE NOTES

R1. ALL CONCRETE WORK SHALL CONFORM TO ACI-318-14 "BUILDING CODE REQUIREMENTS FOR STRUCTURAL CONCRETE" AND TO THE NINTH EDITION OF THE MASSACHUSETTS STATE BUILDING CODE. IN CASE OF CONFLICT, THE MASSACHUSETTS STATE BUILDING CODE SHALL GOVERN.

R2. ALL CONCRETE SHALL BE CONTROLLED, MIXED, AND PLACED UNDER THE SUPERVISION OF AN APPROVED CONCRETE TESTING AGENCY, PROVIDED BY OWNER.

R3. ALL CONCRETE EXPOSED TO THE WEATHER SHALL BE NORMAL WEIGHT CONCRETE WITH A MINIMUM 5,000 PSI 28 DAY COMPRESSION STRENGTH AND CONTAIN AN AIR ENTRAINMENT ADMIXTURE.

R4. UNLESS OTHERWISE NOTED, ALL CONCRETE SHALL BE NORMAL WEIGHT AND HAVE A MINIMUM COMPRESSIVE STRENGTH OF 4,500 POUNDS PER SQUARE INCH AT THE END OF 28 DAYS. CONCRETE SLABS ON GRADE AND SUPPORTED CONCRETE SLABS SHALL BE NORMAL WEIGHT AND HAVE A MINIMUM COMPRESSIVE STRENGTH OF 4,500 POUNDS PER SQUARE INCH AT THE END OF 28 DAYS. CONCRETE SLABS ON STEEL DECK SHALL BE NORMAL WEIGHT CONCRETE AS INDICATED ON PLANS WITH A MINIMUM COMPRESSIVE STRENGTH OF 4,500 PSI AT THE END OF 28 DAYS.

R5. CONCRETE QUALITY IN ACCORDANCE WITH THE REQUIREMENTS OF THESE DRAWINGS AND SPECIFICATIONS IS ESSENTIAL TO THE STRUCTURAL PERFORMANCE OF THIS BUILDING. CONCRETE THAT IS NOT IN ACCORDANCE WITH THE DRAWINGS AND SPECIFICATIONS WILL NOT BE ACCEPTED.

R6. CONCRETE SHALL REACH THE 40 PERCENT OF ITS 28 DAY COMPRESSIVE STRENGTH (fc) BEFORE FORMS OR SHORES FOR WALLS MAY BE REMOVED. NO FORMS CAN BE REMOVED UNLESS CONCRETE HAS ATTAINED SUFFICIENT STRENGTH TO SUPPORT ITS OWN WEIGHT.

R7. CONSTRUCTION JOINT LOCATIONS, OTHER THAN SHOWN ON THE DRAWINGS, ARE PERMITTED SUBJECT TO PRIOR APPROVAL OF THE ENGINEER. EXPANSION JOINT AND CONTROL JOINT LOCATIONS ARE MANDATORY AS SHOWN.

R8. REINFORCING BARS SHALL CONFORM TO ASTM A615 WITH 60,000 POUNDS PER SQUARE INCH YIELD STRENGTH, AS INDICATED AND SHALL HAVE THE FOLLOWING CONCRETE COVER, UNLESS NOTED OTHERWISE ON THE DRAWINGS.

A. SURFACES PLACED IN CONTACT WITH THE GROUND - 3"
B. FORMED SURFACE EXPOSED TO GROUND - 2"
C. INSIDE FACE OF FORMED WALL - 1 1/2"
D. WALL PIER TIES - 1 1/2"
E. SLAB REINFORCING - 3/4" TOP & BOTTOM

R9. WELDED WIRE FABRIC SHALL CONFORM TO ASTM A185; LAP TWO SQUARES AT ALL SPLICES AND TIE AT 3 FOOT CENTERS.

R10. ALL LAP REINFORCING TO DEVELOP FULL TENSION CAPACITY OF THE SMALLER BAR REINFORCEMENT UNLESS OTHERWISE NOTED ON THE DRAWINGS.

R11. PROVIDE BAR SUPPORTS, SPACES, AND ACCESSORIES RECOMMENDED IN THE LATEST ADDITION OF THE ACI DETAILING MANUAL, PUBLICATION SP-66. ALL REINFORCEMENT DETAILING, LAP SPLICES, AND EMBEDMENTS SHALL CONFORM TO THIS MANUAL. ALL ACCESSORIES, SUCH AS SLAB BOLSTERS AND BEAM AND SLAB CHAIRS IN CONTACT WITH EXPOSED SURFACES, SHALL BE ZINC COATED OR PLASTIC TYPE.

R12. PIPES OR CONDUITS SHALL NOT BE PLACED IN SLABS ON GRADE OR ELEVATED SLABS.

R13. CONCRETE WALLS SHALL BE CAST IN PANELS NOT EXCEEDING 60 FEET IN LENGTH.

REINFORCED CONCRETE NOTES (CONT)

R14. DETAILING OF REINFORCEMENT SHALL BE ACCORDING TO THE LATEST EDITION OF ACI 315 "MANUAL OF STANDARD PRACTICE FOR DETAILING REINFORCED CONCRETE STRUCTURES".

R15. SET SECURELY AND TIE ALL REINFORCEMENT BEFORE PLACING CONCRETE. SETTING DOWELS AND REINFORCEMENT INTO WET CONCRETE IS PROHIBITED.

R16. ALL REINFORCING WILL BE CONTINUOUS THROUGH CONSTRUCTION JOINTS.

R17. FOR CONCRETE FILL AND TOPPINGS, PLACE CONSTRUCTION AND EXPANSION JOINTS AT THE SAME LOCATION AS THE CONSTRUCTION AND EXPANSION JOINTS IN THE SUPPORTING CONCRETE.

R18. BUILD ALL CONCRETE MAT FOUNDATIONS, BASE SLABS, WALLS, AND FLOORS TO MINIMIZE THE EFFECTS OF SHRINKAGE BY CASTING ALTERNATE SECTIONS. ADJACENT SECTIONS MAY BE CAST WHEN PREVIOUSLY PLACED SECTION HAS CURED FOR 48 HOURS AFTER ITS INITIAL SET. CURING REQUIREMENTS ARE SPECIFIED IN SECTION 03300, CAST-IN-PLACE CONCRETE OF THE SPECIFICATIONS.

R19. EXPOSED EDGES OF CONCRETE ELEMENTS, SUCH AS PILASTERS, CURBS, AND EQUIPMENT PADS, WILL HAVE 1 INCH CHAMFER.

R20. ALL KEYS SHALL BE 2"x4" (NOMINAL) UNLESS SHOWN OTHERWISE ON DRAWINGS.

R21. NOT ALL OPENINGS THROUGH CONCRETE SLABS AND WALLS ARE SHOWN ON STRUCTURAL DRAWINGS. OPENINGS INDICATED, OR ANY ADDITIONAL OPENINGS OR INSERTS REQUIRED, SHALL BE VERIFIED WITH RESPECTIVE TRADES BEFORE POURING OF CONCRETE.

R22. USE NON-SHRINK, NON-METALLIC GROUT WHERE INDICATED. SEE SECTION 03300, CAST-IN-PLACE CONCRETE OF THE SPECIFICATIONS FOR ALL THE REQUIREMENTS.

R23. SEE ARCHITECTURAL DRAWINGS FOR FINISHES, DEPRESSIONS, REGLETS, NOTCHES, AND OTHER ARCHITECTURAL FEATURES.

R24. PROVIDE SEALANT JOINTS FOR ALL EXPOSED TO VIEW CONSTRUCTION JOINTS, CONTROL JOINTS, AND SHEAR KEYS.

R25. SET ANCHOR BOLTS AND EMBEDDED PLATES REQUIRED FOR CONNECTION OF WORK FURNISHED BY OTHER TRADES FOR INSTALLATION AS PART OF THEIR SCOPE OF WORK.

R26. PROVIDE A MINIMUM OF #4 AT 12 EACH WAY, EACH FACE FOR ALL WALLS, FOOTINGS, PITS, OR PADS, UNLESS NOTED OTHERWISE.

R27. PROVIDE CONCRETE PADS FOR MECHANICAL EQUIPMENT ACCORDING TO THE REQUIREMENTS OF THE MANUFACTURER AND IN ACCORDANCE WITH THE TYPICAL DETAILS. ALWAYS PROVIDE A MINIMUM REINFORCEMENT FOR PADS, UNLESS NOTED OTHERWISE. COORDINATE LOCATIONS WITH MECHANICAL WORK.

R28. PROVIDE CONDENSATE PITS AND OTHER DEPRESSIONS OR CURBS AS REQUIRED FOR COMPLETION OF THE MECHANICAL WORK.

R29. NO CONCRETE SHALL BE PLACED BEFORE REVIEW AND APPROVAL OF THE REINFORCING AND EMBEDDED ITEMS HAVE BEEN OBTAINED FROM THE ARCHITECT / ENGINEER.

R30. WHEN REINFORCEMENT IS PLACED IN TWO OR MORE LAYERS, BARS IN THE UPPER LAYERS SHALL BE PLACED DIRECTLY ABOVE THOSE IN THE BOTTOM LAYER WITH A CLEAR DISTANCE BETWEEN THE LAYERS NOT LESS THAN ONE INCH.

R31. FLOOR SLOPES WILL BE AN INTEGRAL PART OF STRUCTURAL SLABS. SEPARATE CONCRETE FILL IS NOT PERMITTED UNLESS SPECIFICALLY INDICATED ON THE STRUCTURAL DRAWINGS. CONCRETE CAST ON SLOPED SURFACES SHALL BEGIN AT THE LOWEST ELEVATION AND CONTINUE MONOLITHICALLY TOWARD THE HIGHER ELEVATIONS UNTIL THE INTENDED POUR IS COMPLETED.

32. ELEVATED SLABS ON DECK SHALL BE FINISHED LEVEL USING LASER MEASUREMENT AND SHALL MEET THE TOLERANCES FOR FLATNESS. SLAB THICKNESS INDICATED ON THE PLANS ARE A MINIMUM THICKNESSES. FOR QUANTITY OF CONCRETE, THE CONTRACTOR SHALL TAKE INTO ACCOUNT DEFLECTIONS OF SUPPORTING STRUCTURAL MEMBERS, FORMS AND DECK FOR AN AVERAGE ADDITIONAL 3/4" OF CONCRETE FOR THE ENTIRE AREA OF THE SLAB. USE A MAXIMUM OF THE DESIGN SLAB THICKNESS PLUS 1 INCH MAX.

33. FIBER REINFORCEMENT SHALL BE ASTM C 1116 - TYPE III, MACRO-SYNTHETIC FIBERS (HIGH-VOLUME SYNTHETICS USED FOR REDUCTION OF PLASTIC AND DRYING SHRINKAGE CRACKING). PROVIDE IN SLABS-ON-GRADE, ONLY WHERE SHOWN ON THE DRAWINGS. CONTRACTOR SHALL FOLLOW ALL MANUFACTURER'S REQUIREMENTS AND PROVIDE A DOSAGE AS RECOMMENDED BY THE MANUFACTURER FOR CONDITIONS SHOWN ON THE DRAWINGS, E.G. SLAB THICKNESS, CONCRETE MIX STRENGTH, SPACING, AND LOCATION OF CONSTRUCTION JOINTS AND SAW-CUT CONTROL JOINTS, ETC.

REINFORCED CONCRETE MASONRY

M1. ALL REINFORCED CONCRETE MASONRY SHALL CONFORM TO ACI 530 -13 " BUILDING CODE REQUIREMENTS FOR MASONRY STRUCTURES" AND ACI-530.1-13 "SPECIFICATION FOR MASONRY STRUCTURES" FOR THE DESIGN AND CONSTRUCTION OF LOAD-BEARING CONCRETE MASONRY AND TO THE NINTH EDITION OF THE MASSACHUSETTS STATE BUILDING CODE. IN CASE OF CONFLICT, THE MASSACHUSETTS STATE BUILDING CODE SHALL GOVERN.

M2. CONCRETE MASONRY UNITS SHALL CONFORM TO ASTM C90, GRADE N, TYPE I, NORMAL WEIGHT WITH AN AVERAGE MINIMUM COMPRESSIVE STRENGTH OF 2,000 POUNDS PER SQUARE INCH ON THE NET AREA.

M3. MORTAR SHALL CONFORM TO ASTM C270, TYPE S, AND SHALL DEVELOP A COMPRESSIVE STRENGTH OF 1,800 POUNDS PER SQUARE INCH AT 28 DAYS.

M4. GROUT SHALL CONFORM TO ASTM C476, FINE TYPE, AND SHALL HAVE A MINIMUM 28 DAY COMPRESSIVE STRENGTH OF 2,500 POUNDS PER SQUARE INCH

M5. ALL REINFORCING BARS SHALL CONFORM TO ASTM A615, GRADE 60 TYPICALLY, REINFORCING BARS BEING WELDED SHALL CONFORM TO A706, GRADE 60. DEFORMED HORIZONTAL TRUSS REINFORCING MATERIAL SHALL CONFORM TO ASTM A82 AND SHALL HAVE MINIMUM CROSS-SECTIONAL AREAS INDICATED ON PLANS OR IN SECTIONS.

M6. PROVIDE HORIZONTAL AND VERTICAL REINFORCING AS NOTED ON THE DRAWINGS AND FILL ALL REINFORCED BLOCK CELLS WITH GROUT.

M7. WALLS SHALL BE GROUTED USING LOW LIFT GROUT METHOD AND LIMITING THE GROUT LIFT HEIGHT TO 4' - 0" AT LOCATION OF THE BOND BEAM.

M8. REINFORCE CMU AT ALL ELEVATORS, STAIRS, AND MEANS OF EGRESS AND EXTERIOR WALLS WITH A MINIMUM #7 @ 48" ON CENTER VERTICALLY.

M9. PROVIDE 48 DIAMETER LAPS FOR ALL REINFORCING UNLESS NOTED OTHERWISE.

STRUCTURAL STEEL NOTES

S1. ALL STEEL WORK SHALL CONFORM TO THE AISC 360-10 SPECIFICATIONS FOR STRUCTURAL STEEL BUILDINGS OF THE AMERICAN INSTITUTE OF STEEL CONSTRUCTION AND TO THE NINTH EDITION OF THE MASSACHUSETTS STATE BUILDING CODE. IN CASE OF CONFLICT, THE MASSACHUSETTS STATE BUILDING CODE SHALL GOVERN.

S2. THE STRUCTURAL STEEL SHALL CONFORM TO THE FOLLOWING:

A. ALL STRUCTURAL WIDE FLANGE SHAPES: ASTM A992 FY = 50KSI, HAVING A MINIMUM YIELD STRENGTH OF 50 KSI, UNLESS OTHERWISE NOTED.
B. BARS, PLATES, CHANNELS, AND CONNECTION ANGLES: ASTM A36, UNLESS NOTED OTHERWISE.
C. STRUCTURAL TUBES: ASTM A500, GRADE C. FY = 50KSI.
D. STRUCTURAL PIPES: ASTM A53, GRADE B OR ASTM A501.
E. ALL ANCHOR BOLTS SHALL CONFORM TO ASTM F1554.

S3. ALL WELDING SHALL BE IN ACCORDANCE WITH THE AWS D1.1 STRUCTURAL WELDING CODE.

S4. BOTTOM OF DECK ELEVATIONS REFER TO TOP ELEVATION OF SUPPORTING ELEMENT INCLUDING JOISTS, BEAMS, PLATES, TEES, ANGLES, ETC.

S5. TOP-OF-STEEL ELEVATIONS INDICATED ON THE DRAWINGS REFER TO TOP OF TOP-BEAM FLANGE UNLESS NOTED OTHERWISE ON PLANS.

S6. DESIGN AND DETAIL OF ALL CONNECTIONS SHALL BE ACCORDING TO AISC.

S7. THE BEAM CONNECTION DESIGN SHOULD ACCOUNT FOR REACTIONS OF MEMBERS SUPPORTED BY THE BEAM NEAR SUPPORTS CONCENTRATED LOADS WITHIN ONE THIRD THE SPAN OF THE BEAM CLOSER TO THE SUPPORT AND/OR VERTICAL COMPONENTS OF FORCE IN DIAGONAL BRACING MEMBERS FRAMING INTO THE MEMBERS.

S8. ALL CONNECTIONS SHALL BE BOLTED WITH ASTM A325 HIGH-STRENGTH BOLTS OR WELDED IN ACCORDANCE TO AWS AND WITH THE AISC MANUAL REQUIREMENTS UNLESS NOTED OTHERWISE.

S9. UNLESS OTHERWISE NOTED IN PLAN, DETAIL FLOOR MEMBER CONNECTIONS FOR THE FOLLOWING FACTORED (LRFD) VERTICAL REACTIONS:

SHAPE	MINIMUM REACTIONS (KIPS) TO GIRDERS	TO COLUMNS	MINIMUM NUMBER OF ROWS
W12	30	38	3
W14	38	45	3
W16	45	57	4
W18	54	69	4
W21	69	83	4
W24	86	108	5
W27	105	128	6
W30	128	150	7
W33	150	180	8
W36/W40	180	220	9

S10. SHOP CONNECTIONS MAY BE BOLTED OR WELDED, UNLESS THE CONNECTION METHOD IS SPECIFICALLY INDICATED ON THE STRUCTURAL DRAWINGS.

S11. THE CONTRACTOR SHALL SUPPLY ALL PLATES, CLIPS, SET ANGLES, CONNECTIONS, ETC. AS REQUIRED FOR COMPLETION OF THE STRUCTURE, EVEN IF SUCH ITEMS ARE NOT EXPLICITLY CALLED FOR ON THE ARCHITECTURAL OR STRUCTURAL DRAWINGS.

S12. THE CONTRACTOR SHALL PROVIDE ALL EMBEDDED PLATES, SLEEVES, BOX-OUTS, CONDUITS, ETCETERAS, AS REQUIRED BY OTHER TRADES IN THE CONCRETE STRUCTURE.

S13. CONTRACTOR SHALL PROVIDE ALL NECESSARY TEMPORARY GUYING AND BRACING REQUIRED TO ERECT AND HOLD NEW STRUCTURE FOR WIND AND CONSTRUCTION LOADS. THE STEEL FRAME IS A NON-SUPPORTING STEEL FRAME IN ACCORDANCE WITH SECTION 7.9.3 OF THE AISC CODE OF STANDARD PRACTICE. IT RELIES ON THE INTERACTION BETWEEN THE METAL ROOF DECK, THE CONCRETE COMPOSITE FLOOR, BRACED FRAMES, AND MASONRY SHEAR WALLS FOR STABILITY. THE CONTRACTOR IS TO PROVIDE TEMPORARY SUPPORTS UNTIL ALL ELEMENTS REQUIRED FOR STABILITY OF THE STEEL FRAME ARE COMPLETED.

S14. PROVIDE ANCHOR BOLTS, SETTING PLATES, AND EMBEDDED PLATES TO BE SET BY OTHERS.

S15. PROVIDE 1/4" THICK LEVELING PLATES FOR USE IN ALIGNING AND SETTING ANCHOR BOLTS AND BASE PLATES.

S16. MOMENT CONNECTIONS BETWEEN BEAMS AND COLUMNS INDICATED ON THE DRAWINGS SHALL BE DESIGNED AND DETAILED FOR THE FULL MOMENT CAPACITY OF THE CONNECTING MEMBERS, UNLESS NOTED OTHERWISE.

S17. ALL TUBE STEEL COLUMN CAP PLATES ARE TO BE 1/2" THICK MINIMUM EXCEPT MOMENT FRAMED COLUMNS ARE TO BE 3/4" THICK MINIMUM OR MATCH BEAM FLANGE, WHICH EVER IS GREATER, UNLESS OTHERWISE NOTED.

S18. PROVIDE 1/4" THICK CLOSURE PLATES AT ALL OPEN ENDED TUBE STEEL MEMBERS.

S19. STEEL FRAMING SHALL NOT BE CANTED UNLESS SPECIFICALLY NOTED AS "CANTED" ON THE STRUCTURAL DRAWINGS. WHERE THE DECK SLOPE ACROSS THE BEARING SURFACE IS GREATER THAN 1:24, PROVIDE STEEL SHIMS FOR ADEQUATE BEARING OF STEEL DECK.

STEEL JOIST NOTES

SJ1. ALL STEEL JOISTS SHALL CONFORM TO SJI K-10 "STANDARD SPECIFICATION FOR OPEN WEB STEEL JOISTS K-SERIES", AND TO SJI LH/DLH-10 "STANDARD SPECIFICATION FOR LONGSPAN STEEL JOISTS LH-SERIES AND DEEP LONGSPAN STEEL JOISTS DLH-SERIES" OF THE STEEL JOIST INSTITUTE AND TO THE NINTH EDITION OF THE MASSACHUSETTS STATE BUILDING CODE. IN CASE OF CONFLICT, THE MASSACHUSETTS STATE BUILDING CODE SHALL GOVERN.

SJ2. ALL WELDING WILL BE IN ACCORDANCE WITH THE AWS D1.1 STRUCTURAL WELDING CODE.

SJ3. TOP AND BOTTOM CHORD OF ALL JOISTS SHALL BE OF DOUBLE ANGLES.

SJ4. STARTING POINTS FOR ALL JOIST SPACING ARE BASED ON A JOIST OCCURRING AT COLUMN CENTER LINES UNLESS OTHERWISE NOTED ON PLANS.

SJ5. ALL CONTINUOUS HORIZONTAL BRIDGING SHALL CONSIST OF TWO MEMBERS WITH ONE MEMBER AT TOP CHORD OF JOIST AND THE OTHER AT THE BOTTOM CHORD OF JOIST. ATTACH BY WELDING AT POINT OF CONTACT WITH EACH JOIST.

SJ6. ALL BOLTED DIAGONAL BRIDGING SHALL CONSIST OF 2 MEMBERS BOLTED TO TOP CHORD OF JOIST AND BOTTOM CHORD OR FLANGE OF ADJACENT MEMBER AND BOLTED TOGETHER AT INTERSECTION.

SJ7. DESIGN JOISTS AND PROVIDE UPLIFT BRIDGING FOR UPLIFT WIND LOADS AS PER SPECIFICATIONS. PROVIDE BRIDGING AT FIRST BOTTOM CHORD PANEL POINT AT BOTH ENDS OF JOIST.

STEEL DECK

SD1. ALL STEEL DECK WORK SHALL CONFORM TO THE REQUIREMENTS OF

NC1.0 - 10 STANDARD FOR NONCOMPOSITE STEEL FLOOR DECK.
RD1.0 - 10 STANDARD FOR STEEL FLOOR DECK.
SD1-C - 2011 STANDARD FOR COMPOSITE STEEL FLOOR DECK SLABS.
SD1 - QA/QC - 2011 STANDARD FOR QUALITY CONTROL AND QUALITY ASSURANCE FOR INSTALLATION OF STEEL DECK,

OF THE STEEL DECK INSTITUTE AND THE NINTH EDITION OF THE MASSACHUSETTS STATE BUILDING CODE. IN CASE OF CONFLICT, THE MASSACHUSETTS STATE BUILDING CODE SHALL GOVERN.

SD2. STEEL DECK UNITS SHALL BE FORMED FROM STEEL SHEETS CONFORMING TO ASTM A611, OR A653. WHERE GALVANIZED DECK IS INDICATED, SHEETS SHALL BE COATED WITH A ZINC COATING CONFORMING TO ASTM A653, G-60 COATING FOR FLOOR DECK AND FORM DECK AND G-90 COATING FOR ROOF DECK.

SD3. STEEL DECKING SHALL BE FASTENED TO ALL SUPPORTING STEEL MEMBERS AS FOLLOWS AND AS SHOWN ON THE STRUCTURAL DRAWINGS:

3" DEEP DECK:
FIELD: 5/8" DIAMETER ROUND SPOT WELDS TO STEEL SUPPORTS AT EACH RIB, 8" ON CENTER;
PERIMETER: 3/4" DIAMETER ROUND SPOT WELDS TO STEEL SUPPORTS AT 8" ON CENTER
OPENINGS: 3/4" DIAMETER ROUND SPOT WELDS TO STEEL SUPPORTS AT 8" ON CENTER
CORNERS: TWO EACH 3/4" DIAMETER ROUND SPOT WELDS TO STEEL SUPPORTS
SIDELAPS: NO. 10 TEK SCREWS AT 1' - 0" ON CENTER AT SIDELAPS BETWEEN SUPPORTS.

2" AND 3" DEEP COMPOSITE DECK:
FIELD: 5/8" DIAMETER ROUND SPOT WELDS TO STEEL SUPPORTS AT EACH RIB, 12" ON CENTER;
PERIMETER: 5/8" DIAMETER ROUND SPOT WELDS TO STEEL SUPPORTS AT 12" ON CENTER
OPENINGS: 5/8" DIAMETER ROUND SPOT WELDS TO STEEL SUPPORTS AT 12" ON CENTER
CORNERS: ONE EACH 5/8" DIAMETER ROUND SPOT WELDS TO STEEL SUPPORTS
SIDELAPS: NO. 10 TEK SCREWS AT 2' - 0" MAXIMUM ON CENTER OR CLOSER TO SUPPORT WET CONCRETE AND CONSTRUCTION LOADS AT SIDELAPS BETWEEN SUPPORTS.

SPOT WELDS ARE FILL Y JOINED ALL AROUND TO THE DECK. AFTER WELDING, ALL ROOF DECK WELDS SHALL BE PAINTED WITH ZRC COLD GALVANIZING COMPOUND.

SD4. STEEL DECK SIZES, GAGES, AND MINIMUM PROPERTIES SHALL BE AS INDICATED ON DRAWINGS OR IN SPECIFICATIONS.

SD5. PROVIDE MINIMUM 16 GAGE SCREED ANGLE OR GREATER WHERE REQUIRED AT PERIMETER OF BUILDING AND ALL OPENINGS IN CONCRETE SLAB ON STEEL DECK, UNLESS OTHERWISE NOTED.

SD6. HANGING FROM OR ATTACHING TO METAL DECK IS PROHIBITED, ALL DUCTS, PIPES, CONDUITS SHALL BE SUPPORTED FROM STEEL FRAMING OR SUPPLEMENTAL STEEL FRAMING PROVIDED BY THE CONTRACTOR OR SUBCONTRACTOR.

UNIT PRICES - PROVIDE UNIT PRICES AS PART OF THE BID FOR THE FOLLOWING:

1.) STRUCTURAL STEEL BEAMS, ANGLES, PLATES, COLUMNS, ETC. THE UNIT PRICE SHALL INCLUDE WEIGHT OF THE STEEL, COST OF DETAILING, FABRICATION, DELIVERY AND INSTALLATION. PROVIDE THE UNIT PRICE

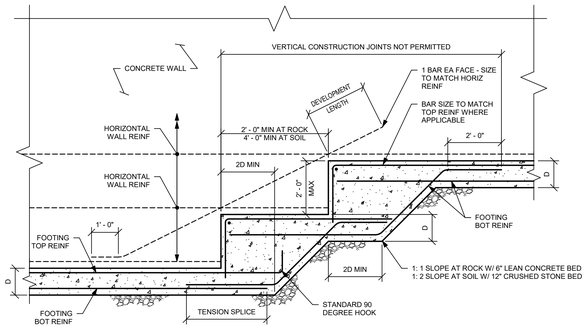

TYPICAL ELEVATION OF STEPPED WALL FOOTING DETAIL

1

NO SCALE

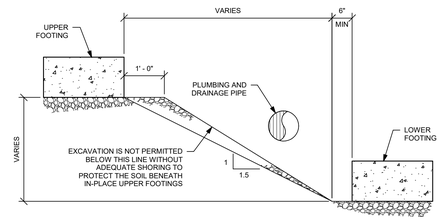

TYPICAL SLOPE BETWEEN FOOTINGS DETAIL

2

NO SCALE

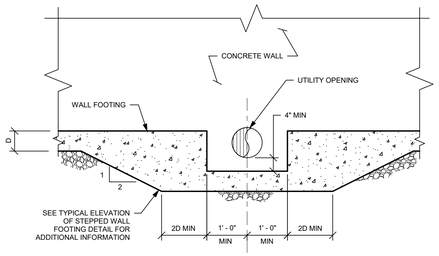

TYPICAL ELEVATION OF STEPPED WALL FOOTING AT UTILITY OPENING DETAIL

NOTE:
STEP FOOTING AS REQUIRED TO BE BELOW UTILITY OPENING. COORDINATE WITH ALL CONTRACT DESIGN DISCIPLINES FOR UTILITY OPENING SIZES, PLAN LOCATIONS AND ELEVATIONS.

3

NO SCALE

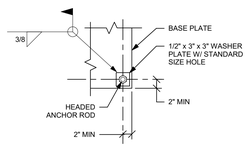

WASHER PLATE DETAIL

NO SCALE

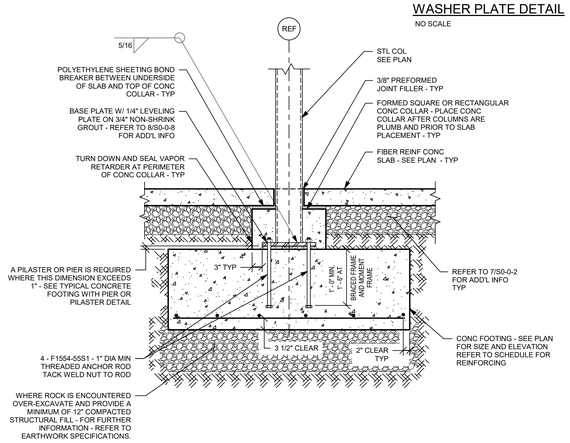

TYPICAL CONCRETE FOOTING WITHOUT PIER OR PILASTER DETAIL

4

NO SCALE

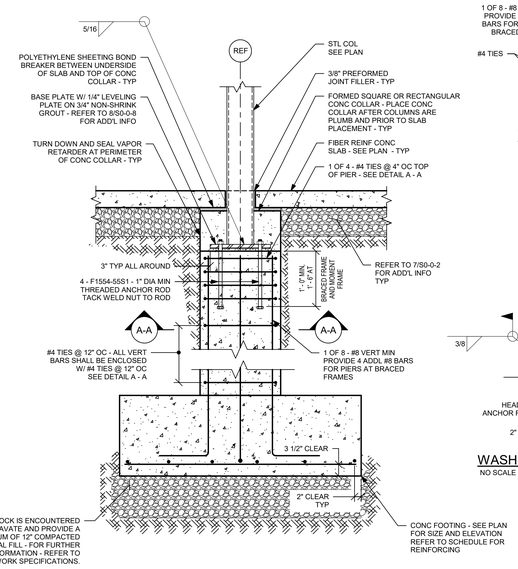

TYPICAL CONCRETE FOOTING WITH PIER OR PILASTER DETAIL

5

NO SCALE

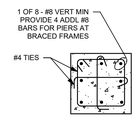

TYPICAL PIER DETAIL A - A

NO SCALE

NOTE:
OFFSET PIER 3" FROM BASE PLATE ON ALL SIDES. NOTE, PIER DIMENSIONS AT BRACED FRAME LOCATIONS SHALL BE COORDINATED WITH BASE PLATE AND LEVELING PLATE SIZES.

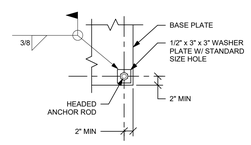

WASHER PLATE DETAIL

NO SCALE

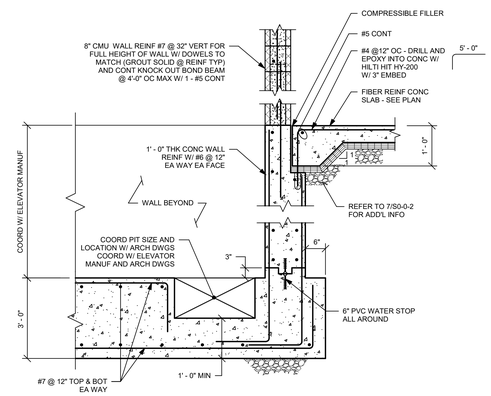

ELEVATOR PIT DETAIL

NOTES:
1.) COORDINATE ELEVATOR PIT DIMENSIONS WITH ELEVATOR MANUFACTURER AND ARCHITECTURAL DRAWINGS.
2.) SEE ARCH DWGS FOR SILL ANGLE AND COORD WITH ELEV MANUFACTURER.

6

NO SCALE

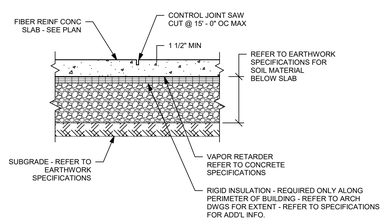

TYPICAL SLAB ON GRADE AND CONTROL JOINT DETAIL

NOTES:
1.) SUBMIT A PLAN SHOWING PROPOSED LOCATIONS OF ALL THE CONTROL JOINTS AND CONSTRUCTION JOINTS FOR REVIEW BY THE ENGINEER PRIOR TO PLACEMENT OF CONCRETE FOR THE SLAB. CONTROL JOINTS SHALL TERMINATE AT SLAB EDGE OR CONSTRUCTION JOINT.
2. PROVIDE SUPPORT FOR WWR AT 3' - 0" ON CENTER MAXIMUM, EACH WAY.

7

NO SCALE

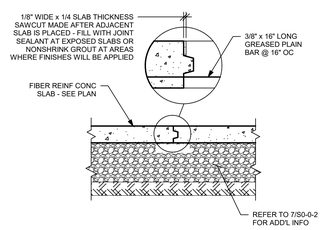

TYPICAL SLAB ON GRADE CONSTRUCTION JOINT DETAIL

NOTE:
SUBMIT A PLAN SHOWING PROPOSED LOCATIONS OF ALL THE CONTROL JOINTS AND CONSTRUCTION JOINTS FOR REVIEW BY THE ENGINEER PRIOR TO PLACEMENT OF CONCRETE FOR THE SLAB.

8

NO SCALE

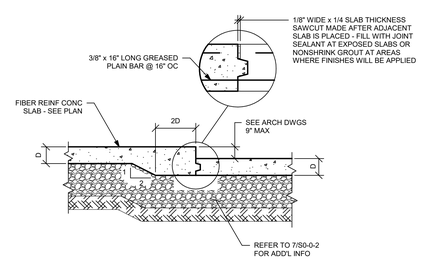

TYPICAL DEPRESSED SLAB ON GRADE CONSTRUCTION JOINT DETAIL

NOTE:
SUBMIT A PLAN SHOWING PROPOSED LOCATIONS OF ALL THE CONTROL JOINTS AND CONSTRUCTION JOINTS FOR REVIEW BY THE ENGINEER PRIOR TO PLACEMENT OF CONCRETE FOR THE SLAB

9

NO SCALE

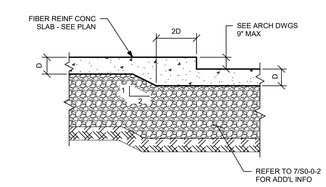

TYPICAL DEPRESSED SLAB ON GRADE DETAIL

10

NO SCALE

DRA
Drummey Rosane Anderson, Inc.
225 Oakland Road Studio 205 South Windsor, CT 06074
260 Charles Street Studio 300 Waltham, MA 02453
Planning | Architecture | Interior Design
Tel: 617.964.1700
www.draiwa.com

NORTHEAST METRO TECH

100 Hemlock Rd,
Wakefield, MA 01880

EDG
Engineers Design Group Inc.
Structural Engineers
389 Main Street, Suite 401
Malden, MA 02148
(781)396-9007
EDG@EDGINC.COM

REVISION LIST

© COPYRIGHT 2023 DRUMMEY ROSANE ANDERSON, INC.

FOR REFERENCE ONLY
SCOPE OF WORK ON THIS DRAWING IS A PART OF EARLY STRUCTURAL BID PACKAGE

MSBA 90% CD SUBMISSION

MAY 12, 2023

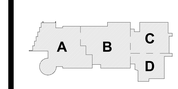

KEY PLAN

PROJECT NORTH | MAGNETIC NORTH

TYPICAL DETAILS

Scale: As indicated
Job No.: 20202
Drawn By: EDG
Date: MAY 12, 2023

S0-0-2

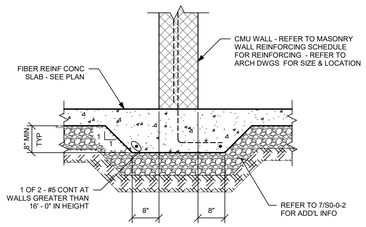

TYPICAL THICKENED SLAB AT CMU WALL DETAIL

1 NO SCALE

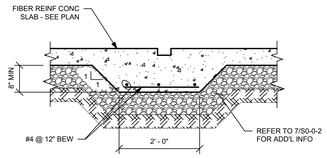

TYPICAL DETAIL AT SILL OF FOLDING PANEL PARTITION

2 NO SCALE

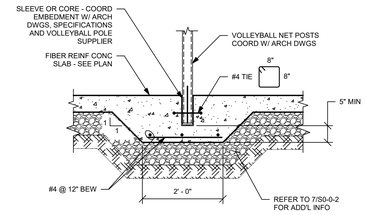

TYPICAL DETAIL AT VOLLEYBALL NET POSTS

3 NO SCALE

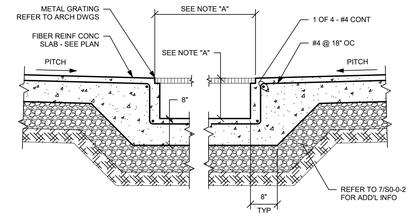

TYPICAL TRENCH DRAIN DETAIL

NOTE "A":
COORDINATE WITH ARCHITECTURAL AND MECHANICAL DRAWING FOR TRENCH LOCATION AND EXTENTS.

4 NO SCALE

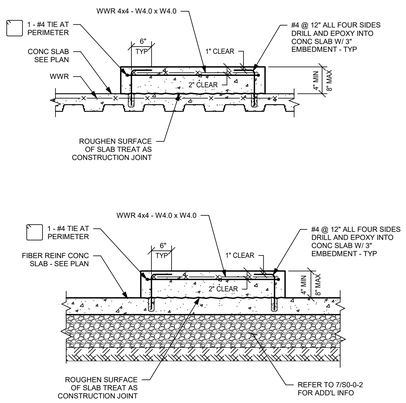

TYPICAL EQUIPMENT PAD DETAILS

NOTE:
FOR SIZE OF PADS AND LOCATIONS
SEE MECHANICAL AND ELECTRICAL DRAWINGS.

5 NO SCALE

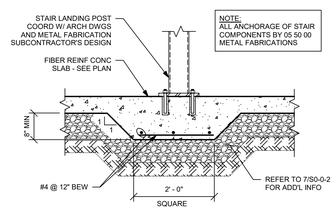

TYPICAL DETAIL AT MISCELLANEOUS AND STAIR LANDING POSTS

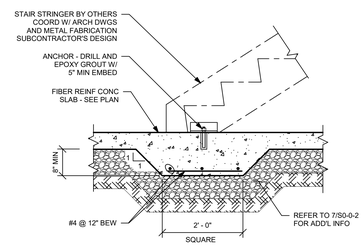

TYPICAL SECTION AT STAIR STRINGER SUPPORT

6 NO SCALE

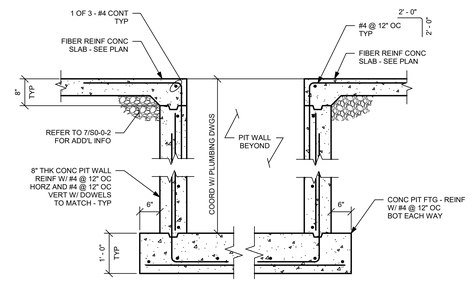

CONCRETE PIT TYPICAL DETAIL

NOTES:

1.) REFER TO ARCHITECTURAL AND PLUMBING DRAWINGS FOR LOCATION AND ADDITIONAL INFORMATION.

2.) REFER TO PLUMBING DRAWINGS FOR PIT DIMENSIONS.

3.) COORDINATE COVER GRATING WITH METAL FABRICATIONS AND ARCHITECTURAL DRAWINGS.

7 NO SCALE

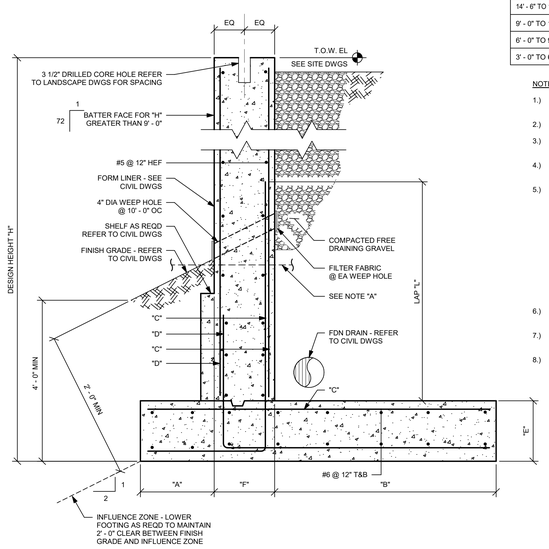

"H"	"A"	"B"	"C"	"D"	"E"	"F"	"L"
14' - 6" TO 17' - 6"	2' - 6"	9' - 0"	#9 @ 6"	#6 @ 12"	2' - 0"	2' - 0"	8' - 0"
9' - 0" TO 14' - 6"	2' - 6"	7' - 6"	#9 @ 10"	#6 @ 12"	2' - 0"	2' - 0"	7' - 6"
6' - 0" TO 9' - 0"	1' - 6"	5' - 6"	#6 @ 12"	#6 @ 12"	1' - 6"	1' - 6"	4' - 0"
3' - 0" TO 6' - 0"	1' - 0"	2' - 0"	#6 @ 12"	#6 @ 12"	1' - 6"	1' - 6"	2' - 6"

NOTES:

1.) FOR TOP OF WALL ELEVATIONS, GRADES AND FINISHES, FOOTING DRAINS, SEE ARCHITECTURAL, CIVIL AND SITE DRAWINGS.

2.) ALL REINFORCING TO BE ASTM GRADE 60.

3.) ALL CONCRETE SHALL HAVE A MINIMUM 28 DAY COMPRESSIVE STRENGTH OF 5000 PSI UNLESS NOTED OTHERWISE.

4.) REFER TO SPECIFICATION SECTION 03300 FOR CONCRETE REQUIREMENTS.

5.) REFER TO THE FOLLOWING TYPICAL DETAILS FOR ADDITIONAL REQUIREMENTS:

A. TYPICAL ELEVATION OF STEPPED WALL FOOTING DETAIL

B. TYPICAL SLOPE BETWEEN FOOTINGS DETAIL

C. TYPICAL ELEVATION OF STEPPED WALL FOOTING AT UTILITY OPENING DETAIL

D. TYPICAL PLAN OF HORIZONTAL REINFORCING OF CONCRETE WALLS DETAIL

E. MINIMUM SPLICE AND EMBEDMENT LENGTH SCHEDULE

6.) WEEP HOLES SHALL BE 4" DIAMETER, GRAY, SCHEDULE 40 PVC PIPE. ALIGN WEEP HOLES WITH VERTICAL REGLETS.

7.) REFER TO LANDSCAPE DRAWINGS FOR FENCE/RAILING SLEEVES AND CONNECTION DETAILS AS APPLICABLE.

8.) PLACE WALL WITH VERTICAL CONSTRUCTION JOINTS AT 30' - 0" OC MAX PER TYPICAL DETAIL 10 ON DRAWING S0-0-3.

TYPICAL CONCRETE SITE RETAINING WALL DETAIL

NOTE:
BACKFILL BOTH SIDES OF WALL SIMULTANEOUSLY TO ELEVATION SHOWN - MAXIMUM OF 1' - 0"DIFFERENCE IN ELEVATION OF BACKFILL.

8 NO SCALE

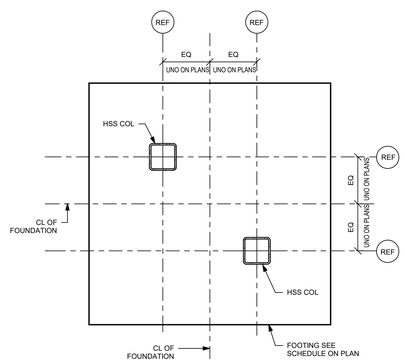

9 NO SCALE

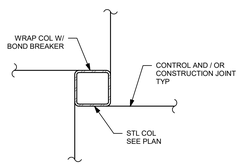

TYPICAL PLAN OF INTERIOR COLUMNS AT SLAB ON GRADE DETAIL

NOTE:
SIMILAR AT EXTERIOR COLUMNS.

10 NO SCALE

DRA
Drummey Rosane Anderson, Inc.
225 Oakland Road
Studio 205
South Windsor, CT
06074
260 Charles Street
Studio 300
Waltham, MA
02453
Planning | Architecture | Interior Design
Tel: 617.964.1700
www.draiwa.com

NORTHEAST METRO TECH

100 Hemlock Rd,
Wakefield, MA 01880

EDG
Engineers Design Group Inc.
Structural Engineers
389 Main Street, Suite 401
Malden, MA 02148
(781)396-9007
EDG@EDGINC.COM

REVISION LIST

© COPYRIGHT 2021 DRUMMEY ROSANE ANDERSON, INC.

FOR REFERENCE ONLY
SCOPE OF WORK ON THIS DRAWING IS A PART OF EARLY STRUCTURAL BID PACKAGE

MSBA 90% CD SUBMISSION

MAY 12, 2023

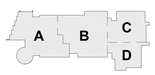

KEY PLAN

PROJECT NORTH

MAGNETIC NORTH

TYPICAL DETAILS

Scale: As indicated
Job No.: 20202
Drawn By: EDG
Date: MAY 12, 2023

S0-0-3

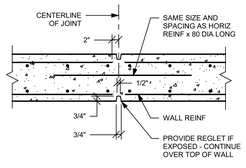

TYPICAL CONCRETE WALL CONTROL JOINT DETAIL

NOTES:

1.) SPACE AT 30' - 0" CENTER TO CENTER MAX.

2.) A CONSTRUCTION JOINT MAY BE SUBSTITUTED FOR A CONTROL JOINT, SEE CONSTRUCTION JOINT DETAIL.

1

NO SCALE

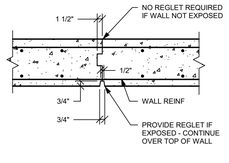

TYPICAL CONCRETE WALL CONSTRUCTION JOINT DETAIL

NOTE:
SPACE AT 60' - 0" CENTER TO CENTER MAX.

2

NO SCALE

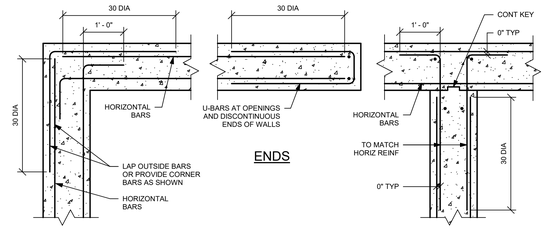

CORNERS

INTERSECTIONS

TYPICAL PLAN OF HORIZONTAL REINFORCING OF CONCRETE WALLS DETAIL

3

NO SCALE

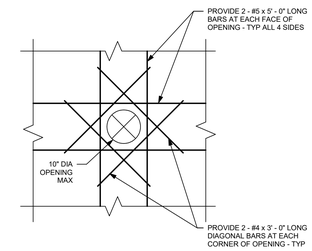

NOTE:
THE SLEEVE SHALL NOT INTERRUPT OR CUT THROUGH THE VERTICAL REINFORCING STEEL AND SHALL NOT BE PLACED IN COLUMN PIERS OR PILASTERS.

4

NO SCALE

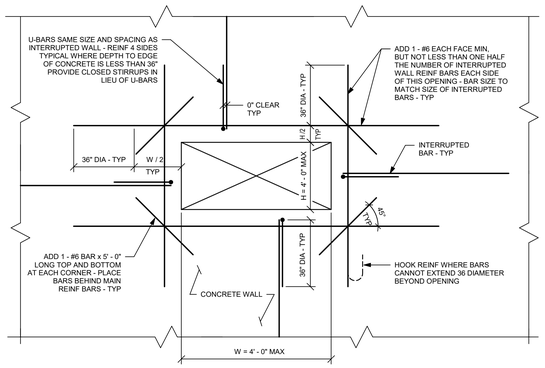

TYPICAL REINFORCEMENT AT OPENINGS IN REINFORCED CONCRETE WALLS DETAIL

NOTES:

1.) FOR QUANTITY, LOCATION, AND SIZES REFER TO ARCHITECTURAL AND MECHANICAL DRAWINGS.

2.) TREAT EACH CONDUIT AS A SEPARATE OPENING.

3.) PROVIDE A MINIMUM OF 12" CLEAR CONCRETE BETWEEN TOP OF PENETRATION AND TOP OF WALL.

5

NO SCALE

BAR SIZE	℄d PER SPACING AND COVER CASE			
	CASE 1		CASE 2	
	TOP BARS	OTHER BARS	TOP BARS	OTHER BARS
#3 #4 #5	19 25 31	15 19 24	28 37 47	22 29 36
#6 #7 #8	37 54 62	29 42 48	56 81 93	43 63 71
#9 #10 #11	70 79 87	54 61 67	105 118 131	81 91 101
#14 #18	105 139	81 107	157 209	121 161

TENSION DEVELOPMENT LENGTHS, ℄d (INCHES)
FOR GRADE 60 UNCOATED BARS
f'_c = 4500 psi; NORMAL-WEIGHT CONCRETE
BASED ON ACI 12.2.2

BAR SIZE	LAP CLASS	LAP LENGTH PER SPACING AND COVER CASE			
		CASE 1		CASE 2	
		TOP BARS	OTHER BARS	TOP BARS	OTHER BARS
#3	B	24	19	36	28
#4	B	32	25	48	37
#5	B	40	31	60	47
#6	B	48	37	72	56
#7	B	70	54	106	81
#8	B	80	62	121	93
#9	B	91	70	136	105
#10	B	102	79	153	118
#11	B	113	87	170	131

TENSION LAP SPLICE LENGTHS, ℄d (INCHES)
FOR GRADE 60 UNCOATED BARS
f'_c = 4500 psi; NORMAL-WEIGHT CONCRETE
BASED ON ACI 12.2.2

4,500 PSI NORMAL-WEIGHT CONCRETE

CASE 1 BEAMS AND COLUMNS: CONCRETE COVER $\geq d_b$, C_i-C_i
BAR SPACING $\geq 2\ d_b$ AND WITH STIRRUPS OR TIES
THROUGHOUT ℄d NOT LESS THAN THE CODE MINIMUM
OTHER MEMBERS: CONCRETE COVER $\geq d_b$ AND C_i-C
BAR SPACING $\geq 3\ d_b$

CASE 2 BEAMS AND COLUMNS: CONCRETE COVER $< d_b$
AND C_i-C_i BAR SPACING $< 2\ d_b$
OTHER MEMBERS: CONCRETE COVER $< d_b$ OR C_i-C
BAR SPACING $< 3\ d_b$

BAR SIZE	℄d PER SPACING AND COVER CASE			
	CASE 1		CASE 2	
	TOP BARS	OTHER BARS	TOP BARS	OTHER BARS
#3 #4 #5	17 22 28	13 17 22	25 33 42	19 26 32
#6 #7 #8	33 49 72	26 37 55	50 73 107	38 56 82
#9 #10 #11	63 70 78	48 54 60	94 105 117	72 81 90
#14 #18	94 125	72 96	140 87	108 144

TENSION DEVELOPMENT LENGTHS, ℄d (INCHES)
FOR GRADE 60 UNCOATED BARS
f'_c = 5000 psi; NORMAL-WEIGHT CONCRETE
BASED ON ACI 12.2.2

BAR SIZE	LAP CLASS	LAP LENGTH PER SPACING AND COVER CASE			
		CASE 1		CASE 2	
		TOP BARS	OTHER BARS	TOP BARS	OTHER BARS
#3	B	22	17	33	25
#4	B	29	22	43	33
#5	B	36	28	54	42
#6	B	43	33	65	50
#7	B	63	49	94	73
#8	B	72	55	108	83
#9	B	81	63	122	94
#10	B	91	70	137	105
#11	B	101	78	152	117

TENSION LAP SPLICE LENGTHS, ℄d (INCHES)
FOR GRADE 60 UNCOATED BARS
f'_c = 5000 psi; NORMAL-WEIGHT CONCRETE
BASED ON ACI 12.2.2

5,000 PSI NORMAL-WEIGHT CONCRETE

NOTES:

1.) TOP BARS ARE DEFINED AS HORIZONTAL BARS WITH MORE THAN 12 INCHES OF CONCRETE CAST IN THE MEMBER BELOW THE REINFORCEMENT. WALL REINFORCEMENT IS CLASSIFIED AS OTHER BARS.

2.) FOR LIGHTWEIGHT AGGREGATE CONCRETE MULTIPLY THE VALUES ABOVE BY 1.3.

ABBREVIATIONS:

d_b DENOTES NOMINAL BAR DIAMETER
$>$ DENOTES GREATER THAN
$\geq$ DENOTES EQUAL TO OR GREATER THAN
$<$ DENOTES LESS THAN
$\leq$ DENOTES EQUAL TO OR LESS THAN

MINIMUM SPLICE AND EMBEDMENT LENGTH SCHEDULE

(UNLESS SHOWN OTHERWISE ON DRAWINGS)

6

NO SCALE

NOTES:

1.) PROVIDE LINTELS OVER ALL MASONRY OPENINGS UNLESS OTHERWISE NOTED OR DETAILED.

2.) PROVIDE ONE ANGLE FOR EACH 4" OF WALL THICKNESS. FOR 6" WALLS PROVIDE TEE, DOUBLE ANGLE OR BUILT-UP SECTION WITH PROPERTIES EQUAL TO OR GREATER THAN 1-1/2" TIMES ANGLE PROPERTIES FOR 4" WALL.

3.) PROVIDE 8" OF BEARING EACH END OF ALL LINTELS.

4.) SPAN LENGTH = CENTERLINE TO CENTERLINE OF BEARING.

5.) ALL EXTERIOR LINTELS SHALL BE GALVANIZED. PROVIDE 1/4" THICK CLOSURE PLATE OVER AIR SPACE AT OPENINGS UNLESS NOTED OR DETAILED OTHERWISE ON ARCHITECTURAL DRAWINGS.

6.) FOR CURVED/BENT LINTELS USE CHORD LENGTH IN CONJUNCTION WITH SCHEDULE ABOVE. PROVIDE HORIZONTAL ANGLES AT EACH END OF LINTEL FOR 8" OF BEARING. HORIZONTAL ANGLES SHALL MATCH LINTEL SIZE AND SHALL BE WELDED TO CURVED ANGLE WITH FULL PENETRATION WELD.

7.) LOOSE LINTELS SHALL BE FURNISHED BY METAL FABRICATIONS (SPECIFICATION 055000) AND INSTALLED BY UNIT MASONRY ASSEMBLIES (SPECIFICATION 042000).

8.) LOOSE LINTELS ARE REQUIRED FOR ALL OPENINGS INCLUDING DOORS, WINDOWS, MECHANICAL DUCTS, PIPES ETC...

9.) ALL THE LINTELS NOT ATTACHED TO STRUCTURAL STEEL ARE IN THE SCOPE OF THE METAL FABRICATION CONTRACTOR (SPECIFICATION 055000). SEE SPECIFICATIONS FOR ADDITIONAL REQUIREMENTS. ALL THE LINTELS WELDED TO STRUCTURAL STEEL ARE THE RESPONSIBILITY OF THE GENERAL CONTRACTOR AND THE STRUCTURAL STEEL FABRICATOR.

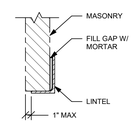

TYPICAL SECTION
SINGLE WYTHE MASONRY

LINTEL SCHEDULE	
MASONRY OPENING	LINTEL SIZE
UP TO 4' - 6"	L 4" x 3-1/2" x 5/16" (4" LEG VERTICAL)
4' - 7" TO 6' - 0"	L 5" x 3-1/2" x 5/16" (5" LEG VERTICAL)
6' - 1" TO 8' - 0"	L 6" x 3-1/2" x 3/8" (6" LEG VERTICAL)
8' - 1" TO 10' - 0"	L 7" x 4" x 3/8" (7" LEG VERTICAL)

TYPICAL STEEL LINTEL SCHEDULE

7

NO SCALE

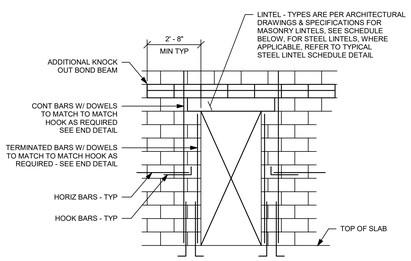

TYPICAL DETAIL

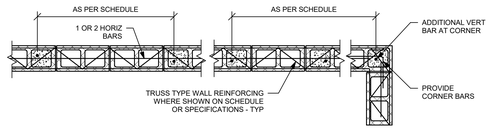

CORNER DETAIL

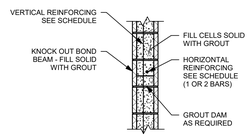

BOND BEAM DETAIL

NOTES:

1.) SEE SCHEDULE FOR SPACING.

2.) PROVIDE REINFORCED BOND BEAM WITHIN 16" OF TOP OF WALL.

3.) PROVIDE REINFORCED BOND BEAM AT TOP AND BOTTOM OF ALL OPENINGS.

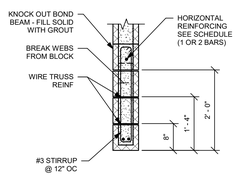

MASONRY LINTEL DETAIL AND SCHEDULE

NOTE:
NO CONSTRUCTION JOINTS OR CONTROL JOINTS ARE PERMITTED WITHIN 3' - 0" OF EDGE OF OPENING.

MASONRY LINTEL SCHEDULE		
OPENING DIMS	8" OR 12" WIDE BEAM	REINFORCEMENT
0' - 0" - 4' - 0"	8" x 8" DEEP	2 - #5 CONT
4 - 0" - 8' - 0"	8" x 16" DEEP	2 - #5 CONT
8' - 0" - 12' - 0"	8" x 24" DEEP	2 - #6 CONT AND WIRE TRUSS TYPE - REINF AT JOINTS
0' - 0" - 4' - 0"	12" x 8" DEEP	2 - #5 CONT
4 - 0" - 8' - 0"	12" x 16" DEEP	2 - #5 CONT AND WIRE TRUSS TYPE - REINF AT JOINTS
8' - 0" - 12' - 0"	12" x 24" DEEP	2 - #6 TOP & BOT CONT AND WIRE TRUSS TYPE REINF AT JOINTS

MINIMUM CONCRETE MASONRY WALL REINFORCING SCHEDULE			
WALL LOCATION	WALL THICKNESS	VERTICAL REINFORCING	HORIZONTAL REINFORCING
SHEAR WALLS AND LOADING BEARING SHEAR WALLS SHOWN ON PLAN	8"	#7 @ 48"	1 - #5 IN BOND BEAM AT 48" ON CENTER
	12"	#6 @ 48"	2 - #5 IN BOND BEAM AT 48" ON CENTER
CLASS 'A' WALLS ALL EXTERIOR WALLS, STAIR WALLS, AND ELEVATOR SHAFT WALLS	6"	#6 @ 48"	1 - #5 IN BOND BEAM AT 48" ON CENTER
	8"	#7 @ 48"	1 - #5 IN BOND BEAM AT 48" ON CENTER
	12"	#8 @ 48"	2 - #5 IN BOND BEAM AT 48" ON CENTER
CLASS 'B' WALLS ALL INTERIOR CMU WALLS GREATER THAN 16' - 0" IN HEIGHT	ALL SIZES	#4 @ 48"	1 - #4 IN BOND BEAM AT 48" ON CENTER
CLASS 'C' WALLS ALL INTERIOR CMU WALLS 16' - 0" IN HEIGHT OR LESS	ALL SIZES	#4 @ 48"	1 - #4 IN BOND BEAM AT 48" ON CENTER

NOTES:
1) REFER TO PLANS, SECTIONS, AND SPECIFICATIONS FOR REINFORCING REQUIREMENTS MORE STRINGENT THAN IN THE SCHEDULE.

2) PROVIDE REINFORCED BOND BEAM WITHIN 16" OF TOP OF WALL

3) ALL VERTICAL REINFORCING TO BE IN SOLIDLY GROUTED CELLS, AND PROVIDE 48 DIAMETER LAP AT ALL BAR SPLICES TYPICAL.

4) PROVIDE 9 GA HORIZONTAL JOINT REINFORCING AT 16" OC FOR ALL WALLS.

NOTE:
ALL REINFORCING WITHIN THE MASONRY WALL SHALL BE FURNISHED BY THE MASONRY SUB CONTRACTOR(SPECIFICATION 04200) EXCEPT DOWELS EMBEDDED IN CONCRETE FOUNDATION ARE THE RESPONSIBILITY TO THE GENERAL CONTRACTOR AND THE CONCRETE SUB-CONTRACTOR

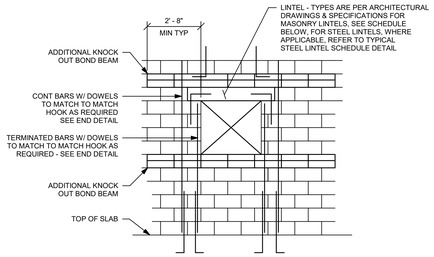

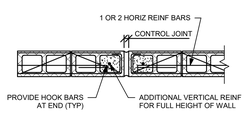

VERTICAL CONTROL JOINT DETAIL

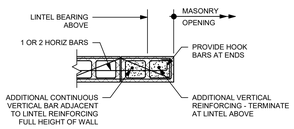

END DETAIL

NOTES:

1.) PROVIDE 1 - CONTINUOUS BAR AT MASONRY OPENING 4' - 0" OR LESS IN WIDTH. AT STEEL LINTEL CONTINUE BARS AT MASONRY LINTEL.

2.) PROVIDE 2 - CONTINUOUS BARS AT MASONRY OPENING 4' - 0" TO 8' - 0" IN WIDTH.

TYPICAL REINFORCING AT CMU WALLS WITH OPENINGS ELEVATION

8

NO SCALE

DRA
Drummey Rosane Anderson, Inc.
225 Oakland Road Studio 205 South Windsor, CT 06074
260 Charles Street Studio 300 Waltham, MA 02453
Planning | Architecture | Interior Design
Tel: 617.964.1700
www.draws.com

NORTHEAST METRO TECH

100 Hemlock Rd,
Wakefield, MA 01880

EDG
Engineers Design Group Inc.
Structural Engineers
389 Main Street, Suite 401
Malden, MA 02148
(781)396-9007
EDG@EDGINC.COM

REVISION LIST

© COPYRIGHT 2021 DRUMMEY ROSANE ANDERSON, INC.

FOR REFERENCE ONLY
SCOPE OF WORK ON THIS DRAWING IS A PART OF EARLY STRUCTURAL BID PACKAGE

MSBA 90% CD SUBMISSION

MAY 12, 2023

KEY PLAN

PROJECT NORTH

MAGNETIC NORTH

TYPICAL DETAILS

Scale: 3/4" = 1'-0"
Job No.: 20202
Drawn By: EDG
Date: MAY 12, 2023

S0-0-4

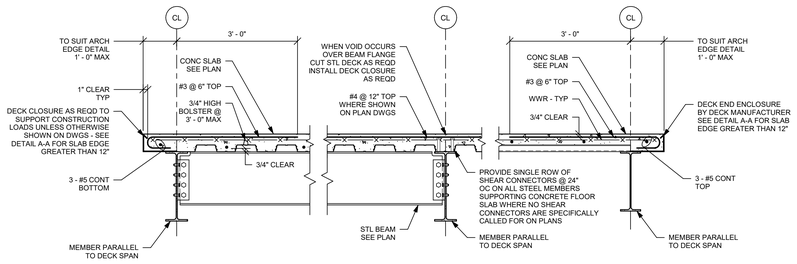

TYPICAL CONCRETE SLAB ON STEEL DECK DETAIL

NOTES:

1.) CENTER SHEAR STUDS DIRECTLY OVER BEAM WEB FOR ALL BEAMS WITH FLANGE THICKNESS LESS THAN 5/16".

2.) USE 6" EDGE OF SLAB DIMENSION UNLESS NOTED OTHERWISE

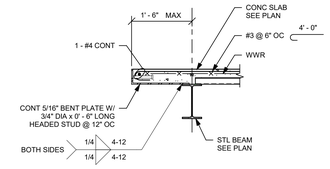

DETAIL A-A

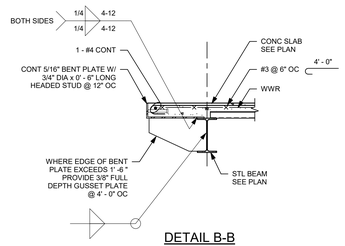

DETAIL B-B

NO SCALE

1

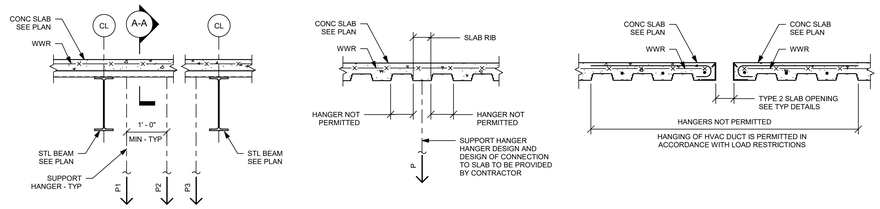

DETAIL A-A

TYPICAL DETAIL - CONCRETE SLAB ON COMPOSITE STEEL DECK SUPPORT HANGER LOAD RESTRICTIONS

NOTES:

1.) P = SINGLE SUPPORT HANGER LOAD - MAXIMUM LOAD OF SINGLE HANGER = 150 lb.

2.) P1 + P2 + P3 = 300 lb - SUM OF ALL SUPPORT LOADS HUNG ALONG A SINGLE RIB SHALL NOT EXCEED 300 lbs.

3.) 3 SUPPORT HANGERS SHOWN ACTUAL NUMBER OF HANGERS VARIES.

4.) DO NOT HANG FROM STEEL DECK TABS.

5.) DESIGN OF HANGERS AND HANGER CONNECTIONS TO THE SLAB IS BY THE CONTRACTOR.

6.) WHERE POSSIBLE ALL HANGERS SHALL BE SUSPENDED FROM THE STRUCTURAL STEEL BEAMS.

7.) DO NOT INSTALL HANGER UNTIL CONCRETE HAS REACHED ITS 28 DAY COMPRESSIVE STRENGTH.

8.) THIS DETAIL SHOULD BE LIMITED TO MAXIMUM 6" DIAMETER PIPES.PIPES LARGER THAT 6" DIAMETER SHOULD BE SUPPORTED FROM THE STRUCTURAL STEEL BEAMS ONLY USING CONCENTRIC HANGERS FROM BEAM FLANGES OR SOME OTHER SUPPORTS SUCH THAT THE LOAD IS NOT ECCENTRIC TO THE BEAM CENTERLINE.

NO SCALE

2

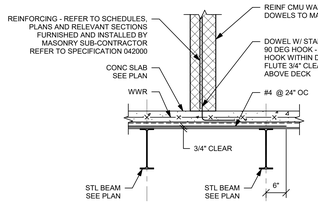

CMU WALL PERPENDICULAR TO DECK SPAN

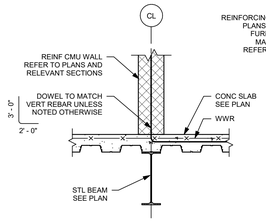

TYPICAL CMU WALL TO FLOOR SLAB DETAIL

NOTE:
REFER TO ARCH DWGS FOR CMU WALL LOCATION AND SIZES.

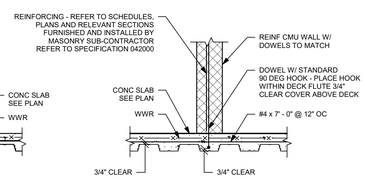

CMU WALL PARALLEL TO DECK SPAN

NO SCALE

3

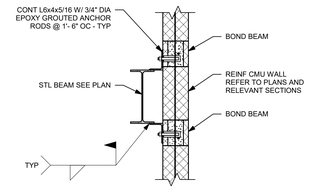

TYPICAL STEEL TO MASONRY CONNECTION DETAIL

NOTE:
DETAIL OCCURS AT ALL SHEAR + CLASS A WALLS AND WHERE SHOWN ON STRUCTURAL PLANS.

NO SCALE

4

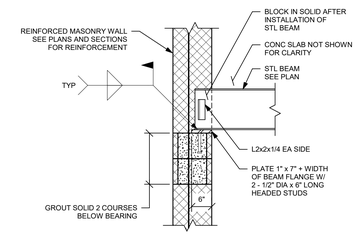

TYPICAL STEEL BEAM ON CMU DETAIL

NOTES:

1.) STRUCTURAL STEEL SHAPES ARE FURNISHED AND INSTALLED UNDER SPECIFICATION SECTION 051200.

2.) STRUCTURAL STEEL PLATES AND ANCHORS ARE FURNISHED UNDER SPECIFICATION SECTION 051200 AND INSTALLED UNDER SPECIFICATION SECTION 042000.

3.) CONSTRUCTION OF BEAM POCKETS AND INFILL OF BEAM POCKETS ARE UNDER SPECIFICATION 042000.

NO SCALE

5

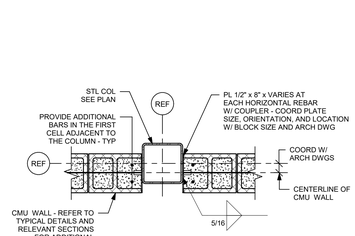

PLAN DETAIL

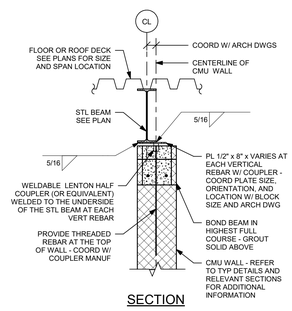

SECTION

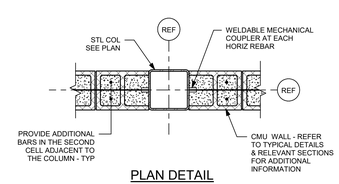

PLAN DETAIL

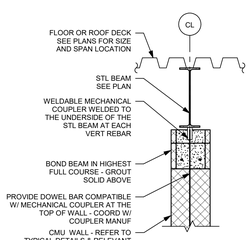

SECTION

NOTES:

1.) WELDABLE MECHANICAL COUPLER (ZAP SCREWLOK SL STRUCTURAL CONNECTOR BY BAR SPLICE PRODUCTS INC OR EQUAL) TO BE FURNISHED AND WELDED TO THE UNDERSIDE OF THE STEEL BEAM OR STEEL COLUMN UNDER (SPECIFICATION 042000) UNLESS NOTED OTHERWISE IN RELEVANT SECTIONS.

2.) REFER TO ARCHITECTURAL DRAWINGS FOR MASONRY SIZE AND LOCATION WITH RESPECT TO THE STEEL COLUMN.

3.) COORDINATE WELDING REQUIREMENTS OF THE COUPLER WITH THE MANUFACTURER.

DOWEL BAR SCHEDULE		
WALL THICKNESS	BAR SIZE	SPACING
8"	#7 x 6' - 0"	MATCH WALL REINF SPACING
12"	#9 x 7' - 0"	MATCH WALL REINF SPACING

TYPICAL STEEL TO REINFORCED MASONRY SHEAR WALL ANCHORAGE DETAILS

(UNLESS NOTED OTHERWISE)

NO SCALE

6

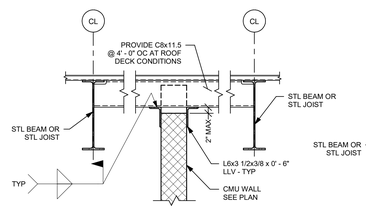

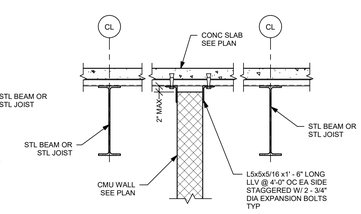

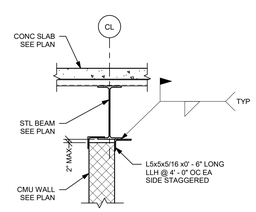

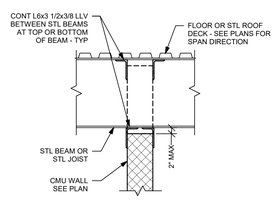

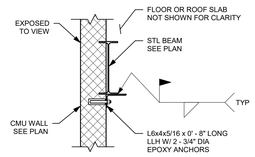

NOTE:
USE ONLY WHERE CMU IS EXPOSED TO VIEW ON ONE SIDE.

TYPICAL MASONRY ANCHORAGE DETAILS

NOTES:

1.) ALL ANGLES CHANNELS AND ACCESSORIES AS REQUIRED TO ANCHOR MASONRY TO THE STEEL STRUCTURE, ROOF DECK OF FLOOR DECK ARE IN THE SCOPE OF THE METAL FABRICATION CONTRACTOR (SPECIFICATION 055000). SEE SPECIFICATIONS FOR ADDITIONAL REQUIREMENTS.

2.) REFER TO ARCHITECTURAL DRAWINGS FOR EXTENTS AND LOCATION OF ALL MASONRY WALLS.

NO SCALE

7

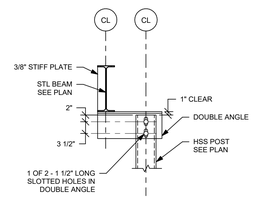

DETAIL 8A

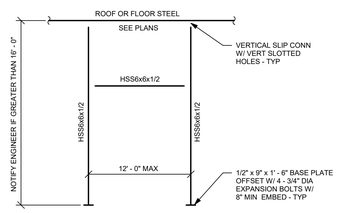

TYPICAL COIL GRILLE OR OVER-HEAD DOOR FRAMING DETAIL

NOTES:

1.) COORDINATE, QUANTITY, LOCATIONS, AND DETAILS WITH ARCHITECTURAL DRAWINGS.

2.) THICKENED SLAB TO BE 3" THICKER THAN BOLT EMBEDMENT AT SLAB ON GRADE.

3.) HSS8x8'S AND CONNECTIONS IN THIS DETAIL ARE BY METAL FABRICATIONS 05 50 00.

NO SCALE

8

DRA

Drummey Rosane Anderson, Inc.

225 Oakland Road
Studio 205
South Windsor, CT
06074

260 Charles Street
Studio 300
Waltham, MA
02453

Planning | Architecture | Interior Design

Tel: 617.964.1700
www.draiwa.com

NORTHEAST METRO TECH

100 Hemlock Rd,
Wakefield, MA 01880

EDG

Engineers Design Group Inc.
Structural Engineers
389 Main Street, Suite 401
Malden, MA 02148
(781)396-9007
EDG@EDGINC.COM

REVISION LIST

© COPYRIGHT 2021 DRUMMEY ROSANE ANDERSON, INC.

FOR REFERENCE ONLY
SCOPE OF WORK ON THIS DRAWING IS A PART OF EARLY STRUCTURAL BID PACKAGE

MSBA 90% CD SUBMISSION

MAY 12, 2023

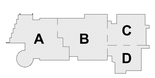

KEY PLAN

PROJECT NORTH

MAGNETIC NORTH

TYPICAL DETAILS

Scale: 3/4" = 1'-0"
Job No.: 20202
Drawn By: EDG
Date: MAY 12, 2023

S0-0-5

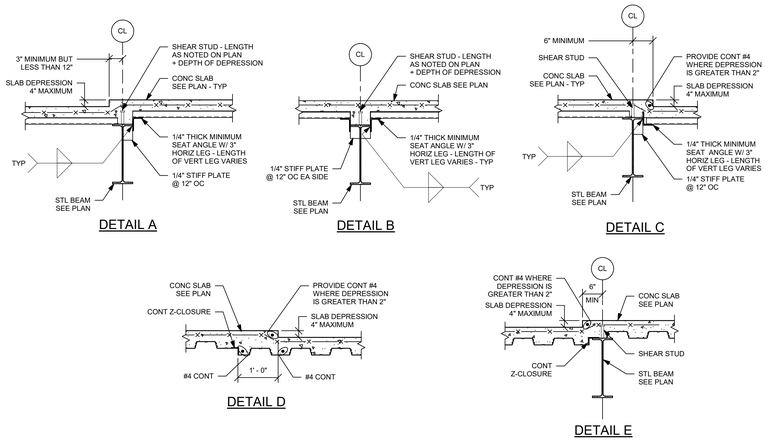

TYPICAL STEEL DECK AT CHANGES IN SLAB ELEVATIONS OR SLAB THICKNESS DETAIL

1

NO SCALE

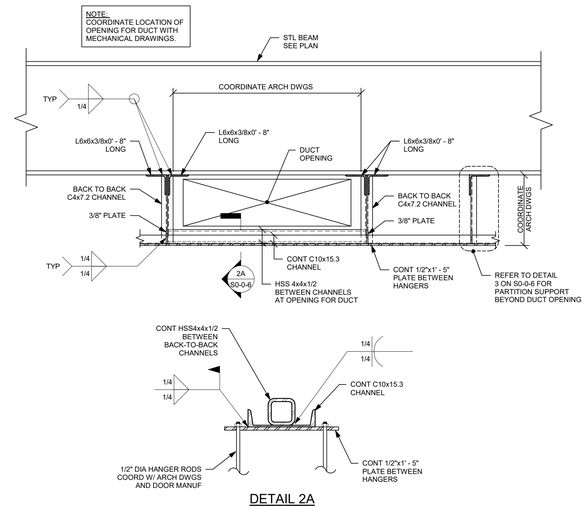

2

NO SCALE

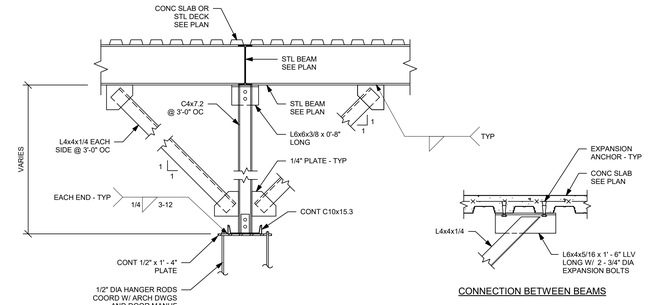

TYPICAL FOLDING DOOR SUPPORT DETAIL

NOTES:

1.) THIS SUPPORT STEEL IS THE SCOPE OF THE METAL FABRICATION FILED SUB-BID CONTRACT.

2.) CENTER THE CHANNEL OVER THE PARTITION TYPICAL.

3.) REMOVE THE L4x4x1/4 FROM ONE SIDE WHERE IN CONFLICT WITH CEILINGS. COORDINATE WITH ARCHITECTURAL DRAWINGS.

4.) ADJUST HANGER AND KICKER SPACING TO MAXIMUM 3' - 6" TO ACCOMMODATE DUCT. COORDINATE DUCT LOCATION WITH MECHANICAL/ARCHITECTURAL DRAWINGS.

5.) FOLLOW DETAIL 1 ON DRAWINGS S006, IF THE REQUIRED HANGER SPACING IS LARGER THAN 3' - 6" TO ACCOMMODATE THE DUCT.

3

NO SCALE

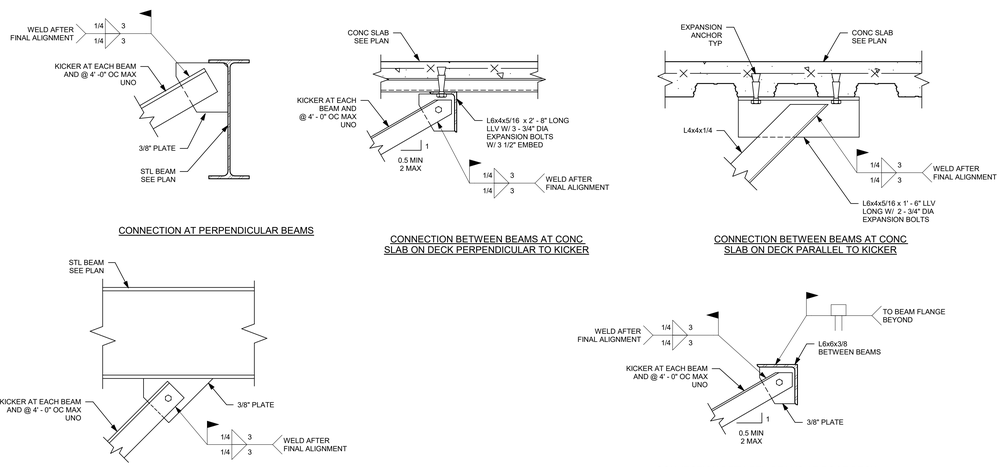

TYPICAL KICKER DETAILS

4

NO SCALE

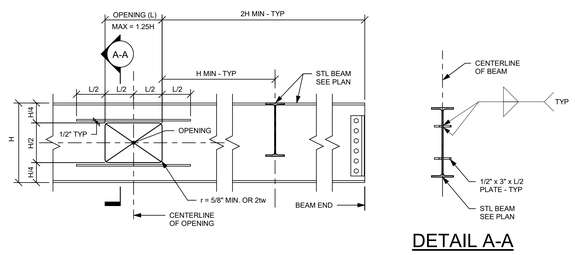

TYPICAL BEAM WEB OPENING DETAIL

NOTES:

1.) FOR QUANTITY, LOCATION, AND SIZES, COORDINATE WITH ARCHITECTURAL AND MECHANICAL DRAWINGS.

2.) SUBMIT ALL BEAM PENETRATIONS ON SHOP DRAWINGS FOR REVIEW BY THE STRUCTURAL ENGINEER OF RECORD PRIOR TO FABRICATION.

3.) MULTIPLE OPENINGS: THE CLEAR DISTANCE BETWEEN THE EDGES OF THE OPENINGS SHALL BE TWO TIMES THE DEPTH OF THE BEAM. SMALLER OPENINGS CAN BE COMBINED INTO A SINGLE, LARGER OPENING PROVIDED THE PARAMETERS OF THE LARGER OPENING MEET THE REQUIREMENTS ABOVE.

5

NO SCALE

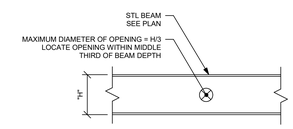

TYPICAL UNREINFORCED BEAM WEB OPENING DETAIL

NOTES:

1.) FOR QUANTITY, LOCATION, AND SIZES, COORDINATE WITH ARCHITECTURAL AND MECHANICAL DRAWINGS.

2.) SUBMIT ALL BEAM PENETRATIONS ON SHOP DRAWINGS FOR REVIEW BY THE STRUCTURAL ENGINEER OF RECORD PRIOR TO FABRICATION.

6

NO SCALE

NOTES:

1.) REMOVE STEEL BACKING BAR AT BOTTOM FLANGE. THE ROOT PASS SHALL BE BACK GOUGED TO SOUND WELD METAL AND RE-WELDED. ADD A 5/16" REINFORCING FILLET WELD AT THE TOP AND BOTTOM OF THE BOTTOM FLANGE.

2.) ADD A 5/16" REINFORCING FILLET WELD TO THE TOP OF THE TOP FLANGE. ADD A 5/16" MIN REINFORCING FILLET WELD TO THE BOTTOM OF STEEL BACKING BAR AT THE TOP FLANGE.

3.) PROVIDE ADDITIONAL THRU PLATES WHERE BEAM DEPTHS VARY.

4.) SEE AISC SEISMIC DESIGN MANUAL FOR ADDITIONAL REQUIREMENTS.

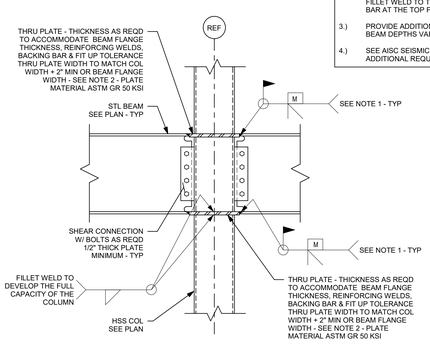

TYPICAL FULLY RESTRAINED MOMENT CONNECTION BEAM TO HSS COLUMN DETAIL

7

NO SCALE

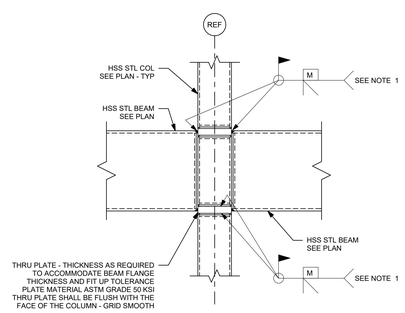

TYPICAL FULLY RESTRAINED MOMENT CONNECTION HSS BEAM TO HSS COLUMN DETAIL

NOTES:

1.) PROVIDE FITTED STEEL BACKING PLATE GRIND WELD SMOOTH

2.) REMOVE ALL ERECTION CLIPS AND BOLTS AFTER FINAL WELDING AND GRIND SMOOTH

8

NO SCALE

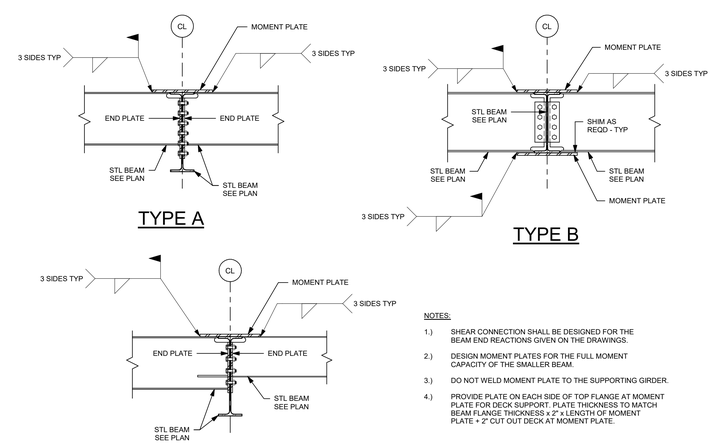

NOTES:

1.) SHEAR CONNECTION SHALL BE DESIGNED FOR THE BEAM END REACTIONS GIVEN ON THE DRAWINGS.

2.) DESIGN MOMENT PLATES FOR THE FULL MOMENT CAPACITY OF THE SMALLER BEAM.

3.) DO NOT WELD MOMENT PLATE TO THE SUPPORTING GIRDER.

4.) PROVIDE PLATE ON EACH SIDE OF TOP FLANGE AT MOMENT PLATE FOR DECK SUPPORT. PLATE THICKNESS TO MATCH BEAM FLANGE THICKNESS x 2" + LENGTH OF MOMENT PLATE + 2" CUT OUT DECK AT MOMENT PLATE.

BEAM TO BEAM MOMENT CONNECTION DETAILS

9

NO SCALE

DRA

Drummey Rosane Anderson, Inc.

225 Oakland Road
Studio 205
South Windsor, CT
06074

260 Charles Street
Studio 300
Waltham, MA
02453

Planning | Architecture | Interior Design

Tel: 617.964.1700
www.draiwa.com

NORTHEAST METRO TECH

100 Hemlock Rd,
Wakefield, MA 01880

EDG

Engineers Design Group Inc.
Structural Engineers
389 Main Street, Suite 401
Malden, MA 02148
(781)396-9007
EDG@EDGINC.COM

REVISION LIST

FOR REFERENCE ONLY
SCOPE OF WORK ON THIS DRAWING IS A PART OF EARLY STRUCTURAL BID PACKAGE

© COPYRIGHT 2021 DRUMMEY ROSANE ANDERSON, INC.

MSBA 90% CD SUBMISSION

MAY 12, 2023

KEY PLAN

PROJECT NORTH

MAGNETIC NORTH

TYPICAL DETAILS

Scale: As indicated
Job No.: 20202
Drawn By: EDG
Date: MAY 12, 2023

S0-0-6

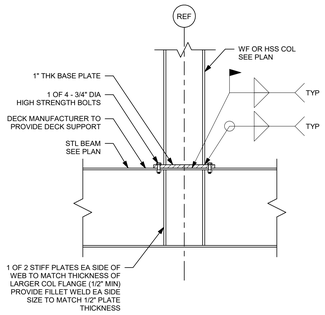

TYPICAL STEEL COLUMN SUPPORTED BY STEEL BEAM DETAIL

1 NO SCALE

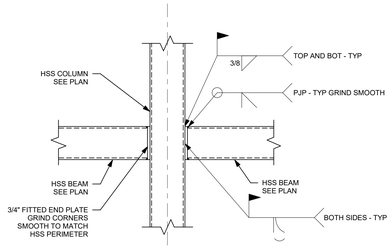

TYPICAL HSS BEAM TO HSS COLUMN CONNECTION DETAIL

NOTE:
WHERE CONNECTION IS EXPOSED TO VIEW - GRIND WELDS SMOOTH REMOVED ALL ERECTION ANGLES, PLATES, STUDS, AND BOLTS AFTER FINAL WELDING IS COMPLETE. FILL ALL HOLES WITH WELD METAL AND GRIND SURFACES AND WELDS SMOOTH.

2 NO SCALE

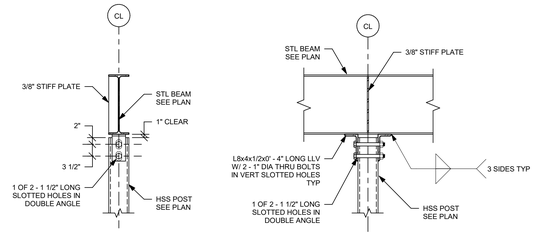

LOOKING PARALLEL WITH BEAM WEB

LOOKING PERPENDICULAR WITH BEAM WEB

TYPICAL TOP POST CONNECTION DETAIL

3 NO SCALE

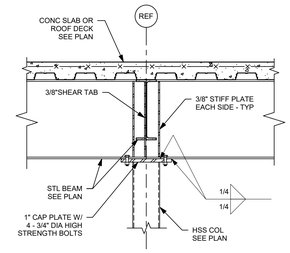

TYPICAL STEEL BEAM OVER COLUMN OR TYPICAL HANGER DETAIL

4 NO SCALE

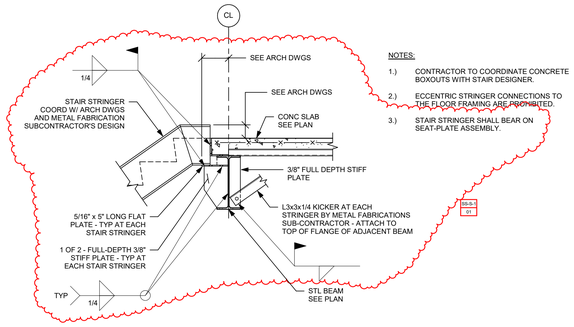

NOTES:

1.) CONTRACTOR TO COORDINATE CONCRETE BOXOUTS WITH STAIR DESIGNER.

2.) ECCENTRIC STRINGER CONNECTIONS TO THE FLOOR FRAMING ARE PROHIBITED.

3.) STAIR STRINGER SHALL BEAR ON SEAT-PLATE ASSEMBLY.

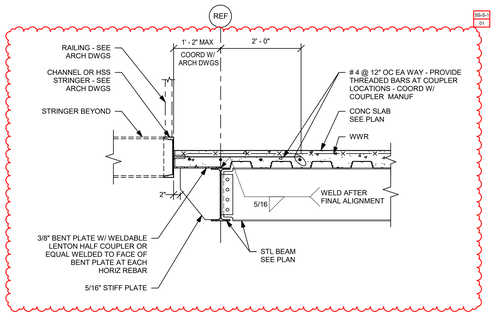

TYPICAL STAIR STRINGER SUPPORT DETAILS

5 NO SCALE

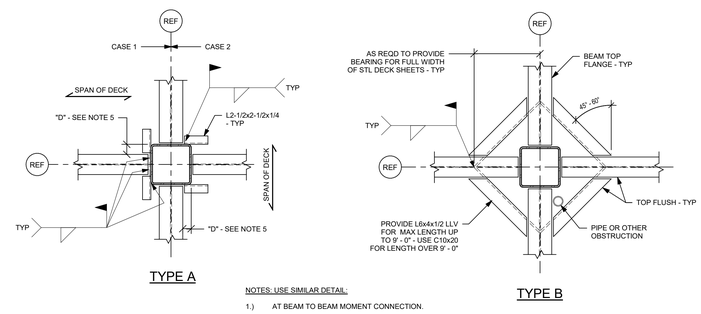

TYPE A

TYPE B

NOTES: USE SIMILAR DETAIL:

1.) AT BEAM TO BEAM MOMENT CONNECTION.

2.) WHERE PIPE SELVES OCCUR NEXT TO COLUMN.

3.) WHERE COLUMN BASE PLATE OCCURS ON TOP FLANGE OF STEEL BEAM.

4.) AT ALL OTHER CONDITIONS WHERE DECK SUPPORT IS INTERRUPTED FOR A DISTANCE GREATER THAN 6".

5.) WHERE "D" IS 6" OR LESS DECK SUPPORT ANGLES ARE NOT REQUIRED.

TYPICAL PLAN OF STEEL DECK SUPPORT DETAIL

6 NO SCALE

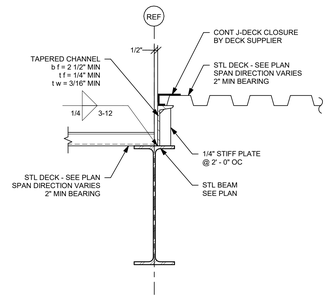

TYPICAL STEPPED ROOF DECK DETAIL

7 NO SCALE

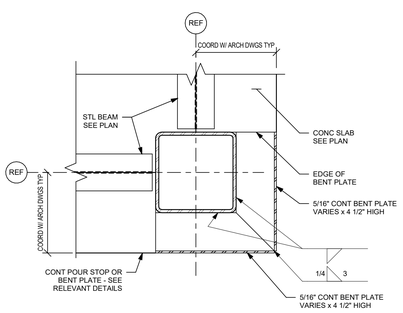

TYPICAL PLAN DETAIL AT CORNERS

8 NO SCALE

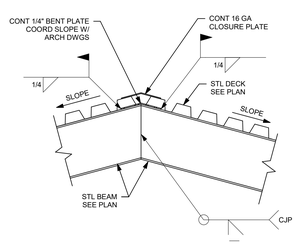

NOTES:

1.) COORDINATE SLOPE WITH ARCHITECTURAL DRAWINGS.

2.) PROVIDE WELDS TO DEVELOP FULL CAPACITY OF BEAM SPECIFIED.

9 NO SCALE

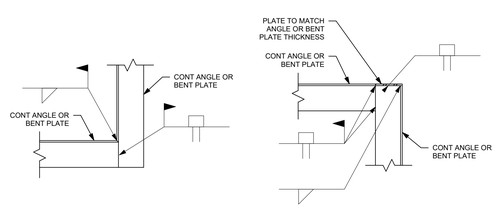

TYPICAL CONTINUOUS EDGE ANGLE PLAN DETAIL AT CORNER

TYPICAL CONTINUOUS EDGE ANGLE PLAN DETAIL AT RE-ENTRANT CORNER

10 NO SCALE

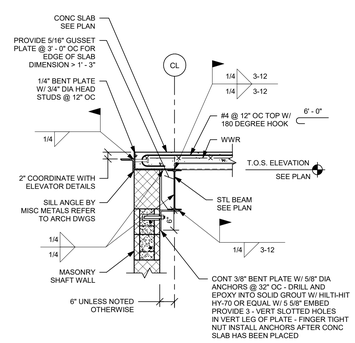

TYPICAL ELEVATOR SLAB DETAIL

11 NO SCALE

DRA

Drummey Rosane Anderson, Inc.

225 Oakland Road
Studio 205
South Windsor, CT
06074

260 Charles Street
Studio 300
Waltham, MA
02453

Planning | Architecture | Interior Design

Tel: 617.964.1700
www.draiwa.com

NORTHEAST METRO TECH

100 Hemlock Rd,
Wakefield, MA 01880

EDG
Engineers Design Group Inc.
Structural Engineers
389 Main Street, Suite 401
Malden, MA 02148
(781)396-9007
EDG@EDGINC.COM

REVISION LIST

SS-S-1	4/14/2023	STRUCTURAL STEEL ADDENDUM 1

© COPYRIGHT 2021 DRUMMEY ROSANE ANDERSON, INC.

FOR REFERENCE ONLY
SCOPE OF WORK ON THIS DRAWING IS A PART OF EARLY STRUCTURAL BID PACKAGE

MSBA 90% CD SUBMISSION

MAY 12, 2023

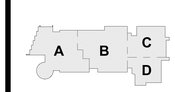

KEY PLAN

PROJECT NORTH

MAGNETIC NORTH

TYPICAL DETAILS

Scale: As indicated
Job No.: 20202
Drawn By: EDG
Date: MAY 12, 2023

S0-0-7

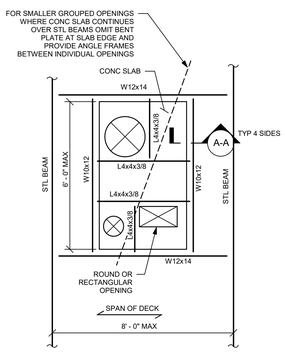

TYPE 1

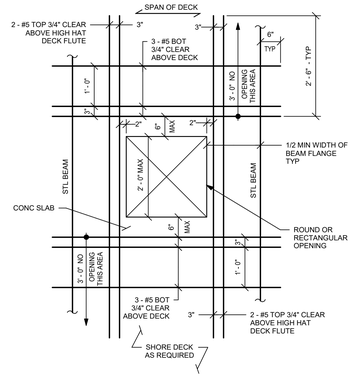

TYPE 2

NOTES:

1.) FOR QUANTITY, LOCATION, AND SIZES,REFER TO ARCHITECTURAL, MECHANICAL, ELECTRICAL, PLUMBING AND FIRE PROTECTION DRAWINGS.

2.) SIZE AND LOCATION TO BE DETERMINED DURING CONSTRUCTION.

3.) FOR OPENINGS 2' - 0" OR LESS.

4.) DO NOT CUT OUT METAL DECK UNTIL CONCRETE HAS REACHED ITS 28 DAY COMPRESSIVE STRENGTH.

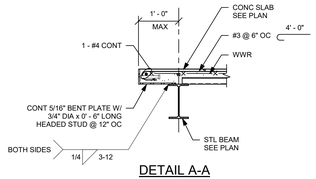

DETAIL A-A

TYPICAL REINFORCEMENT AT OPENINGS IN CONCRETE SLAB ON STEEL DECK DETAIL

1

NO SCALE

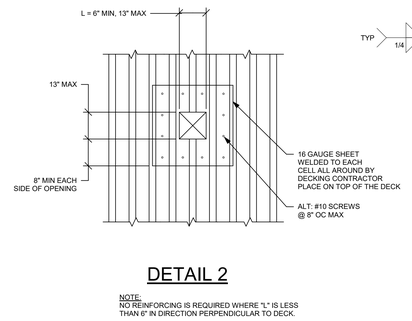

DETAIL 2

NOTE:
NO REINFORCING IS REQUIRED WHERE "L" IS LESS THAN 6" IN DIRECTION PERPENDICULAR TO DECK.

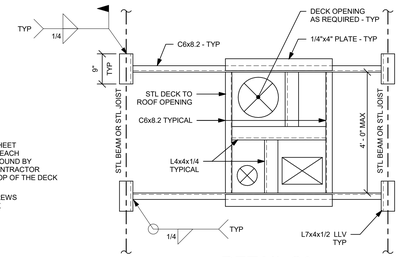

DETAIL 2A

NOTES:

1.) IN ADDITION TO QUANTITIES SHOWN ON STRUCTURAL, ARCHITECTURAL, MECHANICAL, ELECTRICAL, PLUMBING AND FIRE PROTECTION DRAWINGS ALLOW FOR 10 ADDITIONAL LOCATIONS EACH FOR DETAIL 5A AND 5B.

2.) SIZE AND LOCATION TO BE DETERMINED DURING CONSTRUCTION.

3.) INSTALL FRAME BEFORE INSTALLATION OF STEEL ROOF DECK, WELD DECK TO FRAME PER SPECIFICATIONS.

4.) FOR OPENINGS LARGER THAN 4' - 0" NOTIFY ENGINEER.

TYPICAL PLAN OF OPENINGS AND PENETRATIONS IN 1 1/2" AND 3" DEEP ROOF DECK DETAIL

2

NO SCALE

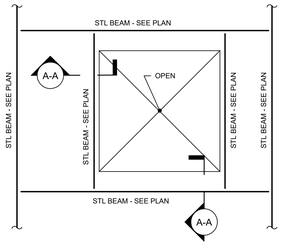

PLAN DETAIL

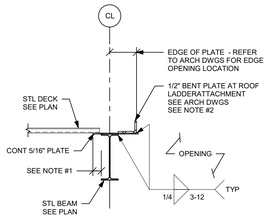

DETAIL A-A

NOTES:

1.) PROVIDE 2" MIN DECK BEARING.

2.) ECCENTRIC CONNECTIONS TO STEEL FRAMING IS PROHIBITED. FRAME ROOF LADDER INTO TOP THIRD OF THE WEB OF THE STEEL BEAM. PROVIDE ADDITIONAL PIECE OF LADDER TO EXTEND ABOVE THE ROOF LEVEL AS REQUIRED BY ARCHITECTURAL DRAWINGS.

TYPICAL ROOF HATCH, VENT, OR SMOKE HATCH OPENING DETAIL

3

NO SCALE

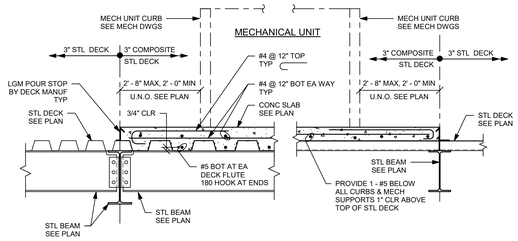

TYPICAL MECHANICAL UNIT ROOF SLAB

NOTES:

1.) 7" CONCRETE SLAB WITH 3" DEEP x 16 GAGE, GALVANIZED COMPOSITE METAL DECK.

2.) TOP OF SLAB ELEVATION VARIES WITH SLOPE OF DECK. MAINTAIN UNIFORM 6" SLAB THICKNESS

3.) REFER TO PLANS FOR SLAB LOCATIONS.

4.) REFER TO ARCHITECTURAL AND MECHANICAL DRAWINGS FOR MECHANICAL UNIT TO STRUCTURE CONNECTION AND ADDITIONAL DETAILS.

5.) COORDINATE SLAB OPENINGS WITH MECHANICAL DRAWINGS AND TYPICAL DETAILS.

6.) PROVIDE 3/4" DIA x 5" LONG HEADED SHEAR STUDS AT 2' - 0" OC MIN UNLESS NOTED OTHERWISE. STUDS ARE NOT REQUIRED ON OPEN WEB STEEL JOISTS.

7.) HOOK BARS AT RTU OPENINGS AND PROVIDE ADDITIONAL BARS AROUND OPENINGS PER TYPICAL DETAILS. OPENINGS GREATER THAN 2' - 0" REQUIRE STEEL BEAMS PER TYPE 2 ON DETAIL 1 ON DRAWING S0-0-8.

4

NO SCALE

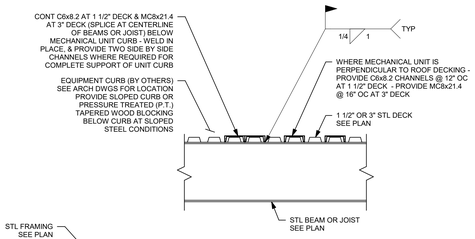

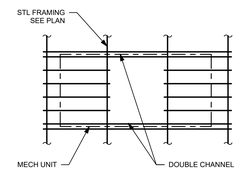

MECH UNIT IS PARALLEL TO ROOF DECK

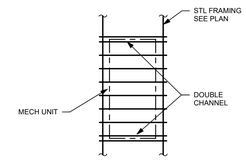

MECH UNIT IS PERPENDICULAR TO ROOF DECK

TYPICAL MECH EQUIPMENT SUPPORT DETAIL

NOTE:
DETAIL APPLIES ONLY TO MECHANICAL EQUIPMENT THAT IS NOT SUPPORTED ON CONCRETE SLABS. REFER TO PLANS FOR SLAB LOCATIONS. REFER TO ARCHITECTURAL AND MECHANICAL DRAWINGS FOR QUANTITY, SIZE, AND LOCATIONS OF ALL MECHANICAL EQUIPMENT.

5

NO SCALE

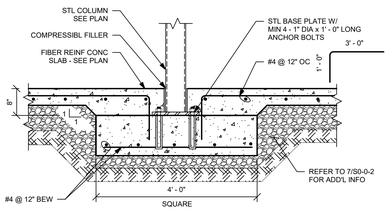

TYPICAL DETAIL AT MISCELLANEOUS COLUMN BEARING ON SLAB ON GRADE

6

NO SCALE

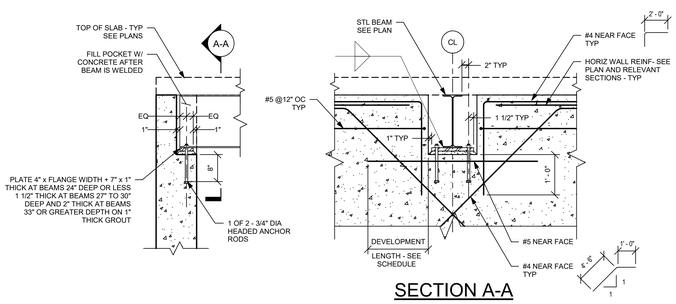

SECTION A-A

TYPICAL STEEL BEAM BEARING ON REINFORCED CONCRETE WALL DETAIL

7

NO SCALE

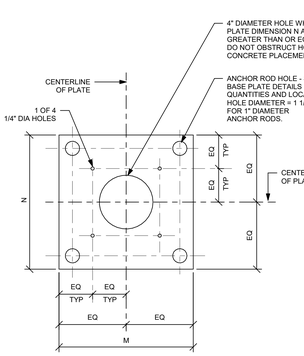

TYPICAL LEVELING PLATE DETAIL

NOTE:
SIMILAR AT RECTANGULAR BASE PLATES AT BRACE FRAMES.

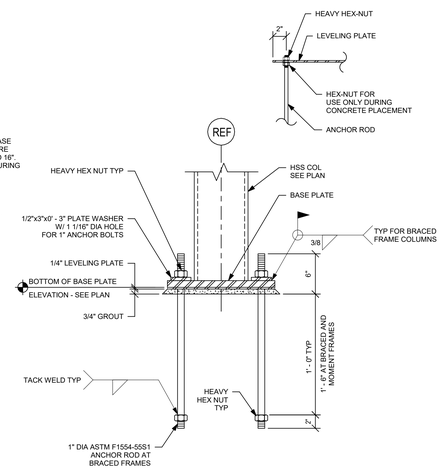

ANCHOR DETAIL

NOTE:
SIMILAR AT RECTANGULAR BASE PLATES AT BRACE FRAMES.

8

NO SCALE

DRA

Drummey Rosane Anderson, Inc.

225 Oakland Road
Studio 205
South Windsor, CT
06074

260 Charles Street
Studio 300
Waltham, MA
02453

Planning | Architecture | Interior Design

Tel: 617.964.1700
www.draiwa.com

NORTHEAST METRO TECH

100 Hemlock Rd,
Wakefield, MA 01880

EDG

Engineers Design Group Inc.
Structural Engineers
389 Main Street, Suite 401
Malden, MA 02148
(781)396-9007
EDG@EDGINC.COM

REVISION LIST

© COPYRIGHT 2021 DRUMMEY ROSANE ANDERSON, INC.

FOR REFERENCE ONLY
SCOPE OF WORK ON THIS DRAWING IS A PART OF EARLY STRUCTURAL BID PACKAGE

MSBA 90% CD SUBMISSION

MAY 12, 2023

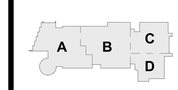

KEY PLAN

PROJECT NORTH | MAGNETIC NORTH

TYPICAL DETAILS

Scale: As indicated
Job No.: 20202
Drawn By: EDG
Date: MAY 12, 2023

S0-0-8

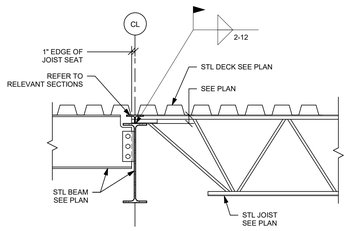

TYPICAL BEAM / JOIST SUPPORT DETAIL AT ROOF

1

NO SCALE

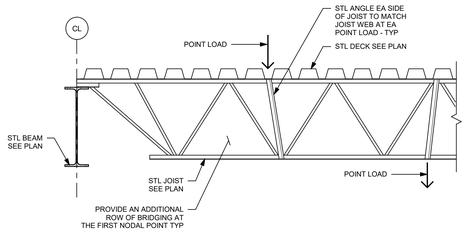

TYPICAL JOIST BOTTOM AND TOP CHORD REINFORCING DETAIL

NOTE:
PROVIDE AT ALL CONDITIONS WHERE JOIST IS LOADED AT LOCATIONS OTHER THAN A PANEL POINT. COORDINATE WITH TRADES FOR EXACT LOCATIONS.

2

NO SCALE

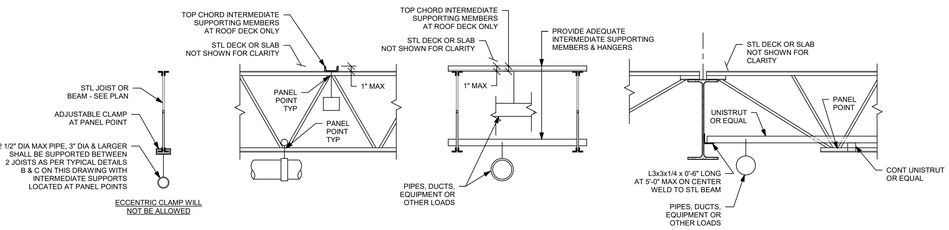

DETAIL A DETAIL B DETAIL C DETAIL D

TYPICAL JOIST LOADING METHOD DETAIL

NOTES:

1.) WHERE POSSIBLE ALL HANGERS SHALL BE SUSPENDED FROM WIDE FLANGE BEAMS.

2.) PIPES, DUCTS, FIXTURES, ETC. SHALL NOT BE HUNG FROM NEW OR EXISTING STEEL DECK OR EXISTING CONCRETE SLAB OR BRIDGING ANGLES.

3.) THE SUM OF ALL BUILDING TRADES HANGER LOADS SHALL NOT EXCEED 250 LBS. PER JOIST. WHEN THIS MAXIMUM IS EXCEEDED A DETAIL OF PROPOSED METHOD OF HANGING SHALL BE SUBMITTED TO THE ARCHITECT FOR APPROVAL.

4.) HANGERS AND SUPPORTING MEMBERS SHALL BE LOCATED AT PANEL POINTS.

5.) PIPING WITH A 4" DIAMETER AND LARGER RUNNING PERPENDICULAR TO JOISTS SHALL BE SUPPORTED FROM EVERY JOIST.

6.) CONTRACTOR SHALL COORDINATE WITH ALL TRADES CONCERNED.

7.) USE THESE TYPICAL DETAILS WHERE APPLICABLE, UNLESS OTHERWISE SHOWN. FIELD MEASURE FOR SIZE OF EXISTING STRUCTURAL FRAMING.

8.) ALL ADDED UNISTRUTS, ANGLES, AND HANGERS TO BE SUPPLIED AND INSTALLED BY F.M.E.P. SUB-CONTRACTORS. REFER TO RELEVANT SPECIFICATIONS.

9.) REFER TO TYPICAL DETAIL 4 ON DRAWING S0.07 FOR ADDITIONAL REINFORCING WHEN HANGERS OR INTERMEDIATE SUPPORTING MEMBERS CAN NOT BE LOCATED AT PANEL POINT. ADDITIONAL REINFORCING SHALL BE SUPPLIED AND INSTALLED BY THE GENERAL CONTRACTOR.

3

NO SCALE

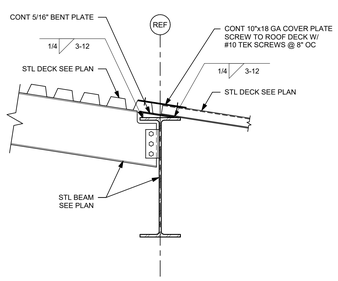

TYPICAL SLOPED DECK SUPPORT AT STEEL BEAM DETAIL

4

NO SCALE

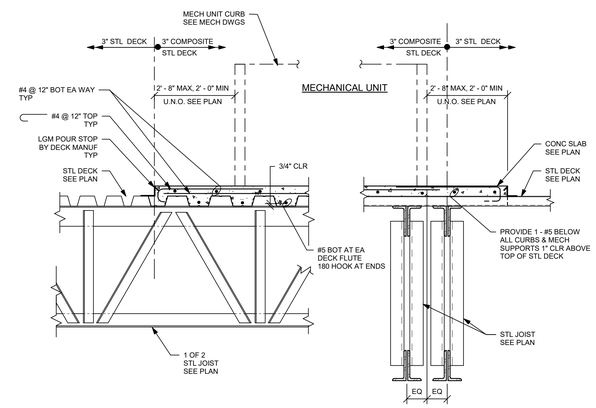

TYPICAL MECHANICAL UNIT ROOF SLAB

NOTES:

1.) 6" CONCRETE SLAB WITH 3" DEEP x 16 GAGE, GALVANIZED COMPOSITE METAL DECK.

2.) TOP OF SLAB ELEVATION VARIES WITH SLOPE OF DECK. MAINTAIN UNIFORM 6" SLAB THICKNESS

3.) REFER TO PLANS FOR SLAB LOCATIONS.

4.) REFER TO ARCHITECTURAL AND MECHANICAL DRAWINGS FOR MECHANICAL UNIT TO STRUCTURE CONNECTION AND ADDITIONAL DETAILS.

5.) COORDINATE SLAB OPENINGS WITH MECHANICAL DRAWINGS AND TYPICAL DETAILS.

6.) HOOK BARS AT RTU OPENINGS AND PROVIDE ADDITIONAL BARS AROUND OPENINGS PER TYPICAL DETAILS. OPENINGS GREATER THAN 2' - 0" REQUIRE STEEL BEAMS PER TYPE 2 ON DETAIL 1 ON DRAWING S0-0-8.

5

NO SCALE

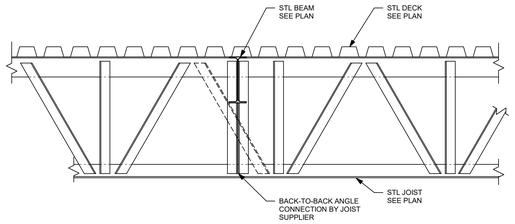

TYPICAL STEEL BEAM - TO - OPEN WEB JOIST CONNECTION DETAIL

NOTES:

1.) COORDINATE DESIGN OF CONNECTION WITH STEEL BEAM REACTION TABLE ON S0-0-1.

2.) PROVIDE ADDITIONAL JOIST REINFORCEMENT FOR STEEL BEAMS NOT ALIGNED WITH PANEL POINTS AS REQUIRED. SEE DETAIL 2 ON S0-0-9 FOR ADDITIONAL INFORMATION.

3.) PROVIDE ADDITIONAL BRIDGING BETWEEN JOISTS AS REQUIRED.

4.) DO NOT SLOPE STEEL BEAM. IF STEEL JOIST IS SLOPED, PROVIDE CONTINUOUS STEEL BENT PLATE ALONG STEEL BEAM AS REQUIRED FOR ADEQUATE DECK SUPPORT PER DETAIL 4 ON S0-0-9.

6

NO SCALE

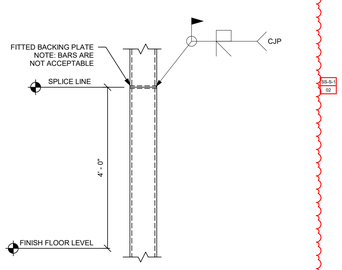

TYPICAL COLUMN SPLICE DETAIL

NOTES:

1.) SEE AISC STRUCTURAL STEEL MANUAL CASE X FOR INFORMATION NOT SHOWN.

2.) LIFTING AND ALIGNMENT CONNECTIONS TO BE DETAILED BY THE STEEL FABRICATOR.

3.) ALL LIFTING AND ALIGNMENT CONNECTIONS ARE TO BE REMOVED AND WELDS GROUND SMOOTH AFTER PERMANENT WELDING IS COMPLETE AND INSPECTED.

7

NO SCALE

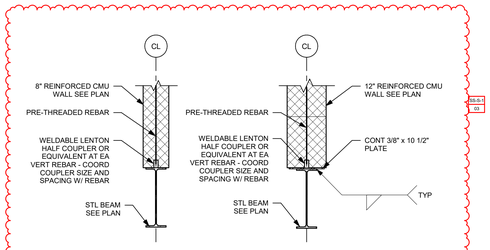

BEAM SCHEDULE			
MASONRY OPENING	0' - 0" - 5' - 0"	5' - 1" - 8' - 0"	8' - 1" - 12' - 0"
8" CMU	W8x24	W10x30	W12x35
12" CMU	W8x24	W10x33	W12x50

TYPICAL LINTEL SCHEDULE AT LOAD BEARING MASONRY

8

NO SCALE

9

NO SCALE

DRA

Drummey Rosane Anderson, Inc.

225 Oakland Road
Studio 205
South Windsor, CT
06074

260 Charles Street
Studio 300
Waltham, MA
02453

Planning | Architecture | Interior Design

Tel: 617.964.1700
www.draiwa.com

NORTHEAST METRO TECH

100 Hemlock Rd,
Wakefield, MA 01880

EDG
Engineers Design Group Inc.
Structural Engineers
389 Main Street, Suite 401
Malden, MA 02148
(781)396-9007
EDG@EDGINC.COM

REVISION LIST

SS-S-1	4/14/2023	STRUCTURAL STEEL ADDENDUM 1

FOR REFERENCE ONLY
SCOPE OF WORK ON THIS DRAWING IS A PART OF EARLY STRUCTURAL BID PACKAGE

© COPYRIGHT 2021 DRUMMEY ROSANE ANDERSON, INC.

MSBA 90% CD SUBMISSION

MAY 12, 2023

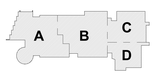

KEY PLAN

PROJECT NORTH MAGNETIC NORTH

TYPICAL DETAILS

Scale: 3/4" = 1'-0"
Job No.: 20202
Drawn By: EDG
Date: MAY 12, 2023

S0-0-9

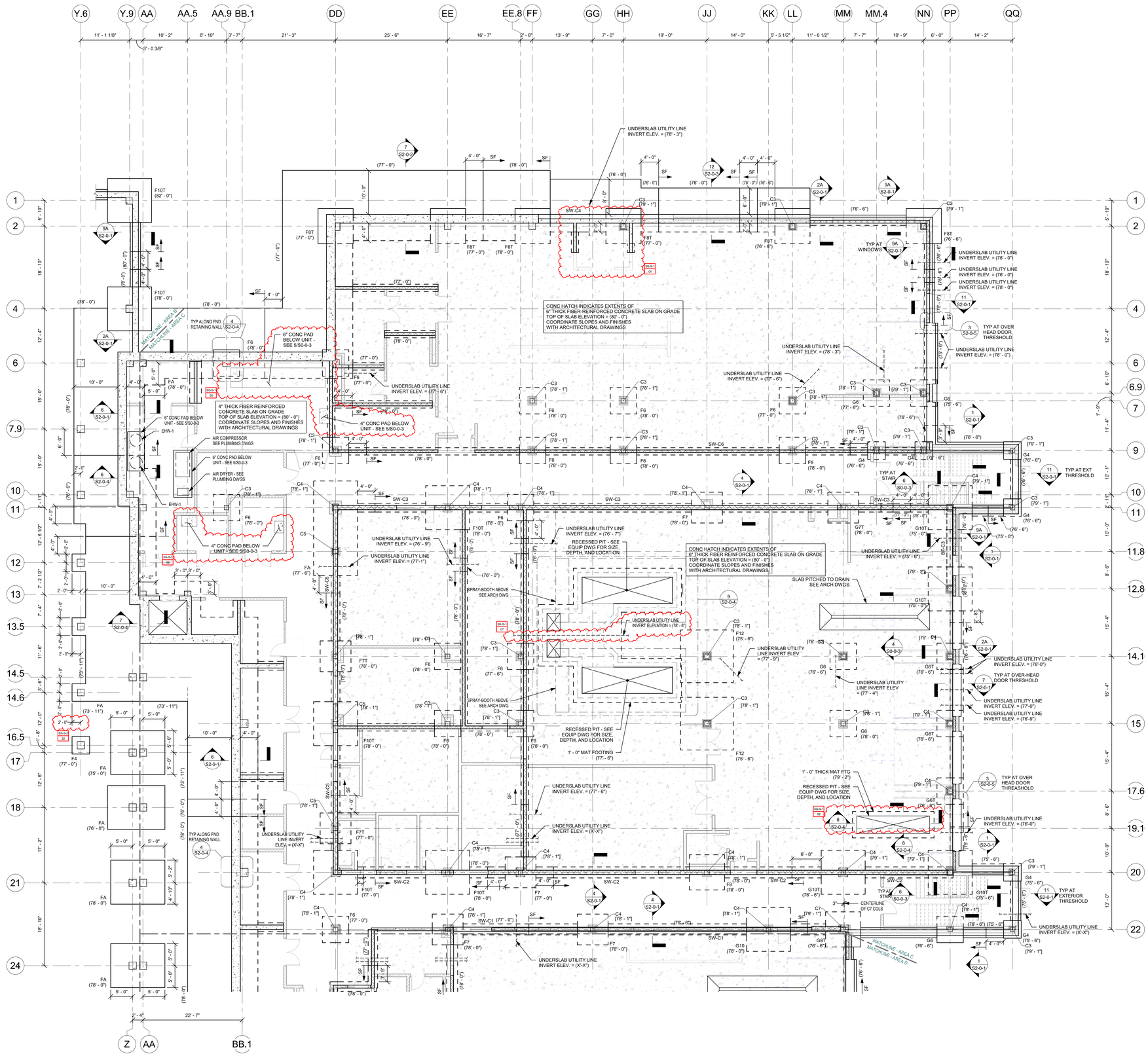

FOUNDATION NOTES:

1.) REFER TO GRADING DRAWINGS FOR PLAN AND GRADE ELEVATIONS THE STRUCTURAL DRAWINGS USES A DATUM OF (100' - 0") AT THE FIRST FLOOR LEVEL, EQUAL TO (163.50') ON THE SITE GRADING PLANS.

2.) FOR GENERAL NOTES AND TYPICAL DETAILS SEE DRAWINGS S0-0-1, S0-0-2, S0-0-3, S0-0-4, S0-0-5, S0-0-6, S0-0-7 AND S0-0-8.

3.) F3 ETC... INDICATES A FOOTING TYPE, FOR SIZE OF FOOTING AND REINFORCEMENT SEE SCHEDULE ON THIS DRAWING.

4.) TOP OF FOOTING ELEVATION TO BE 3' - 6" MINIMUM BELOW LOWEST ADJACENT FINISHED GRADE AT EXTERIOR CONDITIONS AND 2' - 0" BELOW TOP OF CONCRETE SLAB AT INTERIOR CONDITIONS. ALL OTHER TOP OF FOOTING ELEVATIONS ARE DENOTED AS THUS (x' - x") COMPUTED FROM A DATUM ELEVATION OF 100' - 0" ON PLANS. CONTRACTOR TO COORDINATE AND VERIFY ALL TOP OF FOOTING ELEVATIONS WITH UNDERGROUND PLUMBING SUB-CONTRACTOR'S FIELD LAYOUT.

5.) ALL FOOTING ELEVATIONS NOTED ON PLAN ARE SHOWN ONLY TO ASSIST IN COORDINATION. ALL FOOTING ELEVATIONS MUST BE COORDINATED WITH STRUCTURAL REQUIREMENTS, TYPICAL DETAILS, ARCHITECTURAL, MECHANICAL, ELECTRICAL, AND PLUMBING DRAWINGS.

6.) ALL FOOTINGS TO BE CENTERED UNDER COLUMNS UNLESS NOTED OTHERWISE.

7.) SF INDICATES A STEPPED FOOTING REFER TO DETAIL1 ON DRAWING S0-0-2.

8.) C1 ETC... INDICATES A COLUMN TYPE, FOR SIZE OF COLUMNS AND BASE PLATES SEE SCHEDULE ON THIS DRAWING.

9.) BOTTOM OF BASE PLATE ELEVATION TO BE 1' - 11" MINIMUM BELOW TOP OF CONCRETE SLAB AT INTERIOR CONDITIONS, AND 0' - 11" BELOW TOP OF CONCRETE SLAB AT EXTERIOR CONDITIONS. UNLESS NOTED OTHERWISE AS [XX' - XX"] REFER TO ARCHITECTURAL DRAWINGS FOR BRICK SHELF ELEVATIONS.

10.) FOR UNDER SLAB DRAINAGE AND WALL DRAINS, COORDINATE WITH ARCHITECTURAL, STRUCTURAL, CIVIL, AND PLUMBING DRAWINGS.

11.) INDICATES A DEPRESSED SLAB ON GRADE. REFER TO DETAILS 9 AND 10 ON DRAWING S0-0-2 COORDINATE ALL SLAB DEPRESSIONS WITH REQUIREMENTS ON ARCHITECTURAL DRAWINGS.

12.) FOR TYPICAL EXTERIOR DOOR DETAIL REFER TO DETAIL 6 ON DRAWING S0-0-8 AND RELEVANT SECTIONS.

13.) BF-1 ETC... INDICATES A BRACED BAY. REFER TO BRACED FRAME ELEVATIONS AND DETAILS ON DRAWINGS S4-0-5, S4-0-6, S4-0-7, S4-0-8, AND S4-0-9 FOR ADDITIONAL INFORMATION.

14.) INDICATES A CMU WALL. REFER TO TYPICAL DETAIL 8 ON DRAWING S0-0-4 FOR REINFORCEMENT. DETAIL 6 ON DRAWING S0-0-5 FOR CONNECTION OF SHEAR WALLS TO BEAMS AND COLUMNS AND DETAIL 7 ON DRAWING S0-0-5 FOR CONNECTIONS TO STEEL BEAMS AND CONCRETE SLABS AT THE TOP OF WALL FOR NON-STRUCTURAL WALLS. REFER TO RELEVANT SECTIONS FOR CONNECTIONS OF SHEAR WALLS TO THE STRUCTURE.

15.) FOR DIMENSIONS AND ELEVATIONS NOT GIVEN REFER TO ARCHITECTURAL DRAWINGS.

16.) INDICATES CONCRETE PIER REFER TO TYPICAL DETAIL 5 ON DRAWING S0-0-2.

17.) INDICATES UNDERGROUND UTILITY LINES PLUMBING THROUGH CONCRETE FOUNDATION WALL TYPICAL. COORDINATE FOOTING ELEVATION WITH PIPE INVERTS AND TYPICAL STRUCTURAL DETAILS.

18.) CONCRETE PIER REINFORCING PER DETAIL 5 ON DRAWING S0-0-2 IS TO BE PROVIDED FOR ALL CONCRETE WALLS SUPPORTING COLUMNS. HORIZONTAL WALL REINFORCING MUST REMAIN CONTINUOUS.

COLUMN SCHEDULE *

MARK	SIZE	BASE PLATE SIZE
C1	HSS8x8x3/8	1" x 16" x 1' - 4"
C2	HSS8x8x1/2	1" x 16" x 1' - 4"
C3	HSS12x12x3/8	1" x 20" x 1' - 8"
C4	HSS12x12x1/2	1" x 20" x 1' - 8"
C5	HSS12x12x5/8	1" x 20" x 1' - 8"
C6	HSS12.75x0.500	1" x 20" x 1' - 8"
C7	HSS20x12x1/2	1 1/2" x 20" x 2' - 4"
C8	HSS8x4x3/8	1" x 16" x 1' - 0"
C9	HSS16x0.500	1 1/2" x 24" x 2' - 0"
C10	HSS12x6x1/2	1 1/2" x 20" x 1' - 2"
C11	HSS10x0.500	1" x 18" x 1' - 6"
C12	HSS6x6x3/8	1" x 14" x 1' - 2"
C13	HSS6x4x3/8	1" x 12" x 1' - 2"

* BASE PLATE LENGTH AND WIDTH SPECIFIED IN SCHEDULE IS THE MINIMUM SIZE FOR A COLUMN THAT IS PART OF A BRACED FRAME . SEE FOUNDATION NOTE ABOVE AND REFER TO DETAILS ON DRAWING S4-0-8 AND S4-0-9 FOR ADDITIONAL INFORMATION.

* PROVIDE 4 - 1" DIA F1554-55S1 ANCHOR RODS TYPICALLY. REFER TO DETAILS ON DRAWING S4-0-8 AND S4-0-9 FOR ADDITIONAL ANCHOR RODS FOR COLUMN RECEIVING BRACING.

FOOTING SCHEDULE F SERIES

MARK	SIZE	REINFORCEMENT
F4	4' - 0" x 4' - 0" x 2' - 0"	6 - #5 BOT EA WAY
F5	5' - 0" x 5' - 0" x 2' - 0"	7 - #5 BOT EA WAY
F6	6' - 0" x 6' - 0" x 2' - 6"	8 - #6 BOT EA WAY
F7	7' - 0" x 7' - 0" x 2' - 6"	9 - #6 BOT EA WAY
F8	8' - 0" x 8' - 0" x 3' - 0"	10 - #8 BOT EA WAY
F9	9' - 0" x 9' - 0" x 3' - 0"	11 - #9 BOT EA WAY
F10	10' - 0" x 10' - 0" x 3' - 6"	12 - #9 BOT EA WAY
F11	11' - 0" x 11' - 0" x 3' - 6"	13 - #10 BOT EA WAY
F12	12' - 0" x 12' - 0" x 4' - 0"	14 - #10 BOT EA WAY
FA	SEE PLAN x 2' - 0"	#8 @ 12"OC TOP AND BOT EA WAY
T INDICATES TOP REINFORCING TO MATCH BOTTOM REINFORCING		

FOOTING SCHEDULE G SERIES

MARK	SIZE	REINFORCEMENT
G4	4' - 0" x 4' - 0" x 2' - 0"	5 - #5 BOT EA WAY
G5	5' - 0" x 5' - 0" x 2' - 0"	6 - #5 BOT EA WAY
G6	6' - 0" x 6' - 0" x 2' - 0"	7 - #6 BOT EA WAY
G7	7' - 0" x 7' - 0" x 2' - 0"	8 - #6 BOT EA WAY
G8	8' - 0" x 8' - 0" x 2' - 0"	9 - #6 BOT EA WAY
G9	9' - 0" x 9' - 0" x 2' - 6"	10 - #7 BOT EA WAY
G10	10' - 0" x 10' - 0" x 2' - 6"	11 - #7 BOT EA WAY
G11	11' - 0" x 11' - 0" x 2' - 6"	12 - #8 BOT EA WAY
G12	12' - 0" x 12' - 0" x 3' - 0"	13 - #8 BOT EA WAY
G13	13' - 0" x 13' - 0" x 3' - 0"	14 - #9 BOT EA WAY
G14	14' - 0" x 14' - 0" x 3' - 0"	15 - #9 BOT EA WAY
G15	15' - 0" x 15' - 0" x 3' - 0"	16 - #9 BOT EA WAY
GA	SEE PLAN x 2' - 0"	#8 @ 12"OC TOP AND BOT EA WAY
T INDICATES TOP REINFORCING TO MATCH BOTTOM REINFORCING		

FIREPROOFING NOTES:

1. STEEL COLUMNS, SHOWN ON THIS DRAWING, SHALL RECEIVE 2-HOUR FIRE RATING BY CEMENTITIOUS FIREPROOFING UNLESS INDICATED AS A ROUND HSS COLUMN. EXPOSED TO VIEW PORTION OF ROUND HSS COLUMNS SHALL RECEIVE 2-HOUR FIRE RATING BY INTUMESCENT MASTIC FIREPROOFING. CONCEALED FROM VIEW PORTION OF ROUND HSS COLUMN SHALL RECEIVE 2-HOUR FIRE RATING BY CEMENTITIOUS FIREPROOFING.

2. BRACED FRAME SHOWN ALONG COLUMN GRID AA BETWEEN GRIDS 6 AND 11, SHALL RECEIVE 2-HOUR RATING BY CEMENTITIOUS FIREPROOFING. ALL OTHER EXPOSED TO VIEW BRACED FRAMES SHOWN ON THIS DRAWING, SHALL RECEIVE 2-HOUR RATING BY INTUMESCENT MASTIC FIREPROOFING.

3. COORDINATE FIREPROOFING REQUIREMENTS WITH THE SPECIFICATIONS AND ARCHITECTURAL DRAWINGS.

BRACE FRAME KEY

0" TYP	WF / BF-X	INDICATES A BRACE FRAME ABOVE AND BELOW LEVEL
0" TYP	BF-X / WF	INDICATES A BRACE FRAME ABOVE LEVEL
0" TYP	WF / BF-X	INDICATES A BRACE FRAME BELOW LEVEL

DRA
Drummey Rosane Anderson, Inc.
225 Oakland Road Studio 205 South Windsor, CT 06074
260 Charles Street Studio 300 Waltham, MA 02453
Planning | Architecture | Interior Design
Tel: 617-964-1700
www.draiwa.com

NORTHEAST METRO TECH

100 Hemlock Rd,
Wakefield, MA 01880

EDG
Engineers Design Group Inc.
Structural Engineers
389 Main Street, Suite 401
Malden, MA 02148
(781)396-9007
EDG@EDGINC.COM

REVISION LIST

SS-S-1	4/14/2023	STRUCTURAL STEEL ADDENDUM 1
SS-S-2	4/21/2023	STRUCTURAL STEEL ADDENDUM 2

FOR REFERENCE ONLY
SCOPE OF WORK ON THIS DRAWING IS A PART OF EARLY STRUCTURAL BID PACKAGE

MSBA 90% CD SUBMISSION

MAY 12, 2023

KEY PLAN

PROJECT NORTH | MAGNETIC NORTH

LOWER LEVEL FOUNDATION PLAN - AREA C

Scale: 1/8" = 1'-0"
Job No.: 20202
Drawn By: EDG
Date: MAY 12, 2023

S1-1-0C

© COPYRIGHT 2021 DRUMMEY ROSANE ANDERSON, INC.

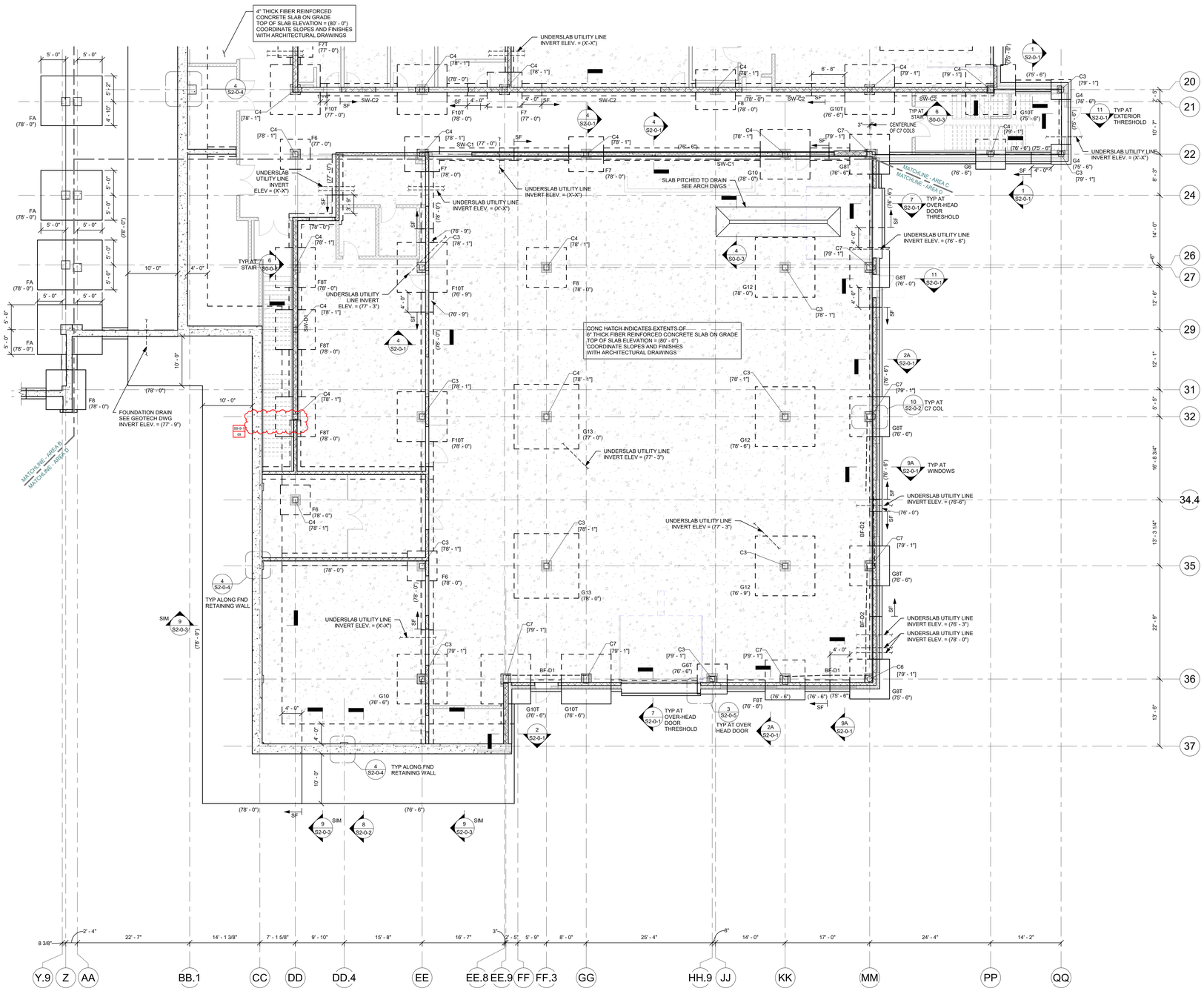

FOUNDATION NOTES:

1.) REFER TO GRADING DRAWINGS FOR PLAN AND GRADE ELEVATIONS THE STRUCTURAL DRAWINGS USES A DATUM OF (100' - 0") AT THE FIRST FLOOR LEVEL, EQUAL TO (163.50') ON THE SITE GRADING PLANS.

2.) FOR GENERAL NOTES AND TYPICAL DETAILS SEE DRAWINGS S0-0-1, S0-0-2, S0-0-3, S0-0-4, S0-0-5 , S0-0-6, S0-0-7 AND S0-0-8.

3.) F3 ETC... INDICATES A FOOTING TYPE. FOR SIZE OF FOOTING AND REINFORCEMENT SEE SCHEDULE ON THIS DRAWING.

4.) TOP OF FOOTING ELEVATION TO BE 3' - 6" MINIMUM BELOW LOWEST ADJACENT FINISHED GRADE AT EXTERIOR CONDITIONS AND 2' - 0" BELOW TOP OF CONCRETE SLAB AT INTERIOR CONDITIONS. ALL OTHER TOP OF FOOTING ELEVATIONS ARE DENOTED AS THUS (x' - x") COMPUTED FROM A DATUM ELEVATION OF 100' - 0" ON PLANS. CONTRACTOR TO COORDINATE AND VERIFY ALL TOP OF FOOTING ELEVATIONS WITH UNDERGROUND PLUMBING SUB-CONTRACTOR'S FIELD LAYOUT.

5.) ALL FOOTING ELEVATIONS NOTED ON PLAN ARE SHOWN ONLY TO ASSIST IN COORDINATION. ALL FOOTING ELEVATIONS MUST BE COORDINATED WITH STRUCTURAL REQUIREMENTS, TYPICAL DETAILS, ARCHITECTURAL, MECHANICAL, ELECTRICAL, AND PLUMBING DRAWINGS.

6.) ALL FOOTINGS TO BE CENTERED UNDER COLUMNS UNLESS NOTED OTHERWISE.

7.) SF INDICATES A STEPPED FOOTING REFER TO DETAIL1 ON DRAWING S0-0-2.

8.) C1 ETC... INDICATES A COLUMN TYPE. FOR SIZE OF COLUMNS AND BASE PLATES SEE SCHEDULE ON THIS DRAWING.

9.) BOTTOM OF BASE PLATE ELEVATION TO BE 1'- 11" MINIMUM BELOW TOP OF CONCRETE SLAB AT INTERIOR CONDITIONS, AND 0' - 11" BELOW TOP OF CONCRETE SLAB AT EXTERIOR CONDITIONS. UNLESS NOTED OTHERWISE AS [XX' - XX"] REFER TO ARCHITECTURAL DRAWINGS FOR BRICK SHELF ELEVATIONS.

10.) FOR UNDER SLAB DRAINAGE AND WALL DRAINS, COORDINATE WITH ARCHITECTURAL, STRUCTURAL, CIVIL, AND PLUMBING DRAWINGS.

11.) INDICATES A DEPRESSED SLAB ON GRADE. REFER TO DETAILS 9 AND 10 ON DRAWING S0-0-2 COORDINATE ALL SLAB DEPRESSIONS WITH REQUIREMENTS ON ARCHITECTURAL DRAWINGS.

12.) FOR TYPICAL EXTERIOR DOOR DETAIL REFER TO DETAIL 6 ON DRAWING S0-0-8 AND RELEVANT SECTIONS.

13.) BF-1 ETC... INDICATES A BRACED BAY. REFER TO BRACED FRAME ELEVATIONS AND DETAILS ON DRAWINGS S4-0-5, S4-0-6, S4-0-7, S4-0-8, AND S4-0-9 FOR ADDITIONAL INFORMATION.

14.) INDICATES A CMU WALL. REFER TO TYPICAL DETAIL 8 ON DRAWING S0-0-4 FOR REINFORCEMENT , DETAIL 6 ON DRAWING S0-0-5 FOR CONNECTION OF SHEAR WALLS TO BEAMS AND COLUMNS AND DETAIL 7 ON DRAWING S0-0-5 FOR CONNECTIONS TO STEEL BEAMS AND CONCRETE SLABS AT THE TOP OF WALL FOR NON-STRUCTURAL WALLS. REFER TO RELEVANT SECTIONS FOR CONNECTIONS OF SHEAR WALLS TO THE STRUCTURE.
OR
OR

15.) FOR DIMENSIONS AND ELEVATIONS NOT GIVEN REFER TO ARCHITECTURAL DRAWINGS.

16.) INDICATES CONCRETE PIER REFER TO TYPICAL DETAIL 5 ON DRAWING S0-0-2.

17.) INDICATES UNDERGROUND UTILITY LINES PLUMBING THROUGH CONCRETE FOUNDATION WALL TYPICAL. COORDINATE FOOTING ELEVATION WITH PIPE INVERTS AND TYPICAL STRUCTURAL DETAILS.

18.) CONCRETE PIER REINFORCING PER DETAIL 5 ON DRAWING S0-0-2 IS TO BE PROVIDED FOR ALL CONCRETE WALLS SUPPORTING COLUMNS. HORIZONTAL WALL REINFORCING MUST REMAIN CONTINUOUS.

COLUMN SCHEDULE *

MARK	SIZE	BASE PLATE SIZE
C1	HSS8x8x3/8	1" x 16" x 1' - 4"
C2	HSS8x8x1/2	1" x 16" x 1' - 4"
C3	HSS12x12x3/8	1" x 20" x 1' - 8"
C4	HSS12x12x1/2	1" x 20" x 1' - 8"
C5	HSS12x12x5/8	1" x 20" x 1' - 8"
C6	HSS12.75x0.500	1" x 20" x 1' - 8"
C7	HSS20x12x1/2	1 1/2" x 20" x 2' - 4"
C8	HSS8x4x3/8	1" x 16" x 1' - 0"
C9	HSS16x0.500	1 1/2" x 24" x 2' - 0"
C10	HSS12x6x1/2	1 1/2" x 20" x 1' - 2"
C11	HSS10x0.500	1" x 18" x 1' - 6"
C12	HSS6x6x3/8	1" x 14" x 1' - 2"
C13	HSS6x4x3/8	1" x 12" x 1' - 2"

* BASE PLATE LENGTH AND WIDTH SPECIFIED IN SCHEDULE IS THE MINIMUM SIZE FOR A COLUMN THAT IS PART OF A BRACED FRAME. SEE FOUNDATION NOTE ABOVE AND REFER TO DETAILS ON DRAWING S4-0-8 AND S4-0-9 FOR ADDITIONAL INFORMATION.

* PROVIDE 4 - 1" DIA F1554-55S1 ANCHOR RODS TYPICALLY. REFER TO DETAILS ON DRAWING S4-0-8 AND S4-0-9 FOR ADDITIONAL ANCHOR RODS FOR COLUMN RECEIVING BRACING.

FOOTING SCHEDULE F SERIES

MARK	SIZE	REINFORCEMENT
F4	4' - 0" x 4' - 0" x 2' - 0"	6 - #5 BOT EA WAY
F5	5' - 0" x 5' - 0" x 2' - 0"	7 - #5 BOT EA WAY
F6	6' - 0" x 6' - 0" x 2' - 6"	8 - #6 BOT EA WAY
F7	7' - 0" x 7' - 0" x 2' - 6"	9 - #6 BOT EA WAY
F8	8' - 0" x 8' - 0" x 3' - 0"	10 - #8 BOT EA WAY
F9	9' - 0" x 9' - 0" x 3' - 0"	11 - #9 BOT EA WAY
F10	10' - 0" x 10' - 0" x 3' - 6"	12 - #9 BOT EA WAY
F11	11' - 0" x 11' - 0" x 3' - 6"	13 - #10 BOT EA WAY
F12	12' - 0" x 12' - 0" x 4' - 0"	14 - #10 BOT EA WAY
FA	SEE PLAN x 2' - 0"	#8 @ 12"OC TOP AND BOT EA WAY

T INDICATES TOP REINFORCING TO MATCH BOTTOM REINFORCING

FOOTING SCHEDULE G SERIES

MARK	SIZE	REINFORCEMENT
G4	4' - 0" x 4' - 0" x 2' - 0"	5 - #5 BOT EA WAY
G5	5' - 0" x 5' - 0" x 2' - 0"	6 - #5 BOT EA WAY
G6	6' - 0" x 6' - 0" x 2' - 0"	7 - #6 BOT EA WAY
G7	7' - 0" x 7' - 0" x 2' - 0"	8 - #6 BOT EA WAY
G8	8' - 0" x 8' - 0" x 2' - 0"	9 - #6 BOT EA WAY
G9	9' - 0" x 9' - 0" x 2' - 6"	10 - #7 BOT EA WAY
G10	10' - 0" x 10' - 0" x 2' - 6"	11 - #7 BOT EA WAY
G11	11' - 0" x 11' - 0" x 2' - 6"	12 - #8 BOT EA WAY
G12	12' - 0" x 12' - 0" x 3' - 0"	13 - #8 BOT EA WAY
G13	13' - 0" x 13' - 0" x 3' - 0"	14 - #9 BOT EA WAY
G14	14' - 0" x 14' - 0" x 3' - 0"	15 - #9 BOT EA WAY
G15	15' - 0" x 15' - 0" x 3' - 0"	16 - #9 BOT EA WAY
GA	SEE PLAN x 2' - 0"	#8 @ 12"OC TOP AND BOT EA WAY

T INDICATES TOP REINFORCING TO MATCH BOTTOM REINFORCING

FIREPROOFING NOTES:

1. STEEL COLUMNS, SHOWN ON THIS DRAWING, SHALL RECEIVE 2-HOUR FIRE RATING BY CEMENTITIOUS FIREPROOFING UNLESS INDICATED AS A ROUND HSS COLUMN. EXPOSED TO VIEW PORTION OF ROUND HSS COLUMNS SHALL RECEIVE 2-HOUR FIRE RATING BY INTUMESCENT MASTIC FIREPROOFING. CONCEALED FROM VIEW PORTION OF ROUND HSS COLUMN SHALL RECEIVE 2-HOUR FIRE RATING BY CEMENTITIOUS FIREPROOFING.
2. EXPOSED TO VIEW BRACED FRAMES SHOWN ON THIS DRAWING, SHALL RECEIVE 2-HOUR RATING BY INTUMESCENT MASTIC FIREPROOFING.
3. COORDINATE FIREPROOFING REQUIREMENTS WITH THE SPECIFICATIONS AND ARCHITECTURAL DRAWINGS.

BRACE FRAME KEY

0" TYP WF BF-X	INDICATES A BRACE FRAME ABOVE AND BELOW LEVEL
0" TYP BF-X WF	INDICATES A BRACE FRAME ABOVE LEVEL
0" TYP WF BF-X	INDICATES A BRACE FRAME BELOW LEVEL

DRA
Drummey Rosane Anderson, Inc.
225 Oakland Road Studio 205 South Windsor, CT 06074
260 Charles Street Studio 300 Waltham, MA 02453
Planning | Architecture | Interior Design
Tel: 617-964-1700
www.draiae.com

NORTHEAST METRO TECH

100 Hemlock Rd,
Wakefield, MA 01880

EDG
Engineers Design Group Inc.
Structural Engineers
389 Main Street, Suite 401
Malden, MA 02148
(781)396-9007
EDG@EDGINC.COM

REVISION LIST

SS-S-1	4/14/2023	STRUCTURAL STEEL ADDENDUM 1

FOR REFERENCE ONLY
SCOPE OF WORK ON THIS DRAWING IS A PART OF EARLY STRUCTURAL BID PACKAGE

© COPYRIGHT 2021 DRUMMEY ROSANE ANDERSON, INC.

MSBA 90% CD SUBMISSION

MAY 12, 2023

KEY PLAN

PROJECT NORTH
MAGNETIC NORTH

LOWER LEVEL FOUNDATION PLAN - AREA D

Scale: 1/8" = 1'-0"
Job No.: 20202
Drawn By: EDG
Date: MAY 12, 2023

S1-1-0D

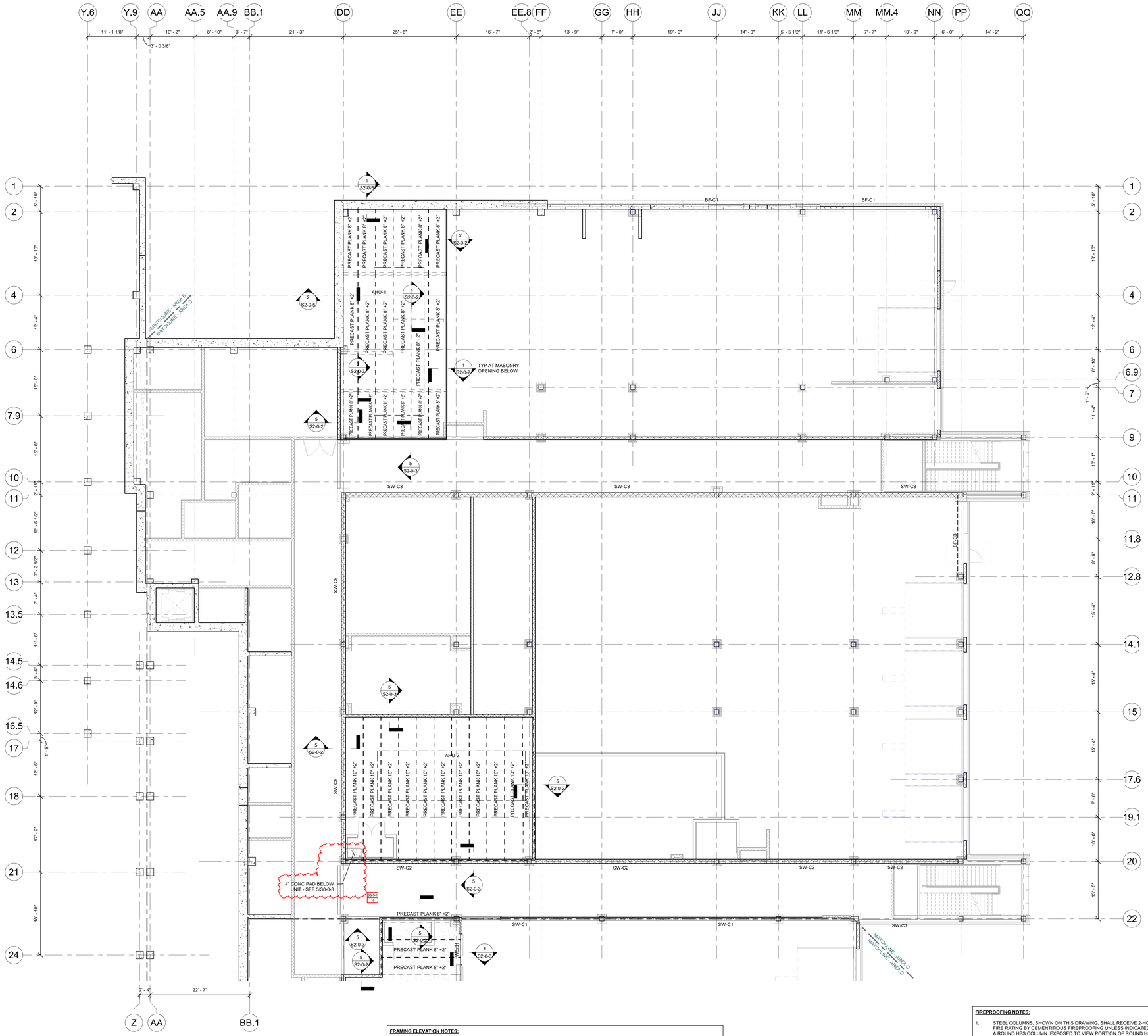

FRAMING NOTES:

1.) FOR GENERAL NOTES AND TYPICAL DETAILS SEE DRAWINGS S0-0-1, S0-0-2, S0-0-3, S0-0-4, S0-0-5 , S0-0-6, S0-0-7 AND S0-0-8.

2.) REFER TO ARCHITECTURAL DRAWINGS FOR ELEVATIONS AND VERTICAL DIMENSIONS. PITCH ALL STEEL UNIFORMLY TO LOW PONTS AT THE COLUMNS AND BENT BEAMS AS SHOWN ON THE ARCHITECTURAL DRAWINGS.

3.) BF-1 ETC... INDICATES A BRACED BAY. REFER TO BRACED FRAME ELEVATIONS AND DETAILS ON DRAWINGS S4-0-1, S4-0-2, S4-0-3, S4-0-4, S4-0-5, S4-0-6, S4-0-7 AND S4-0-8 FOR ADDITIONAL INFORMATION.

4.) [XX] INDICATES THE NUMBER OF 3/4" DIAMETER x 4 1/4" LONG HEADED STUDS WELDED TO THE TOP FLANGE OF THE BEAM. SPACE STUDS EVENLY ALONG THE BEAM UNLESS NOTED OTHERWISE.

5.) INDICATES A MOMENT CONNECTION TO DEVELOP THE FULL CAPACITY OF THE MEMBER. REFER TO TYPICAL DETAILS 7, 8 AND 9 ON DRAWING S0-0-6.

6.) INDICATES A 5/16" FILLET WELD ALL AROUND. (HSS BEAM TO HSS COLUMN) WHERE BEAM DIMENSIONS EXCEED COLUMN DIMENSIONS PROVIDE 1/2" THICK STEEL CAP PLATE TO ACHIEVE ALL AROUND WELD. REFER TO TYPICAL DETAIL 2 ON DRAWING S0-0-7.

7.) < X" > INDICATES UPWARD CAMBER AT THE MID-SPAN OF THE MEMBER.

8.) 5-1/4" INDICATES SPAN DIRECTION OF 2" DEEP, 20 GAGE GALVANIZED COMPOSITE STEEL DECK WITH 3 1/4" LIGHT WEIGHT CONCRETE TOPPING. TOTAL THICKNESS = 5 1/4". REINFORCE WITH 6x6 - W2.1xW2.1 WWR.

9.) 1 1/2" INDICATES SPAN DIRECTION OF 1 1/2" DEEP, 20 GAGE TYPE B, GALVANIZED STEEL ROOF DECK.

10.) 3" NA INDICATES SPAN DIRECTION OF 3" DEEP, 20 GAGE TYPE NA, GALVANIZED ACOUSTIC STEEL ROOF DECK.

11.) 4" LW INDICATES SPAN DIRECTION OF 1 1/2" DEEP, 20 GAGE GALVANIZED COMPOSITE STEEL DECK WITH 2 1/2" LIGHT WEIGHT CONCRETE TOPPING. TOTAL THICKNESS = 4". REINFORCE WITH 6x6 - W2.1xW2.1 WWR.

12.) FOR EXACT NUMBER, SIZE, AND LOCATION OF OPENING IN STEEL DECKING REFER TO MECHANICAL AND ARCHITECTURAL DRAWINGS. FOR FRAMING INFORMATION, REFER TO DETAILS 1, 2 AND 3 ON DRAWING S0-0-8.

13.) 6" HATCHED AREA INDICATES LOCATION OF CONCRETE SLAB WITH 3" DEEP, 18 GAGE GALVANIZED COMPOSITE STEEL DECK WITH 4" NORMAL WEIGHT CONCRETE TOPPING. TOTAL THICKNESS = 6". REINFORCE WITH 6x6 - W2.1xW2.1 WWR. REFER TO TYPICAL DETAIL 5 ON DRAWING S0.07 FOR ADDITIONAL INFORMATION. USE 3/4" DIA x 5" LONG HEADED STUDS.

14.) INDICATES A ROOF DRAIN. REFER TO TYPICAL STRUCTURAL DETAILS 1 AND 2 ON DRAWING S0-0-8 AND DETAIL 1 ON DRAWING S0-0-8. FOR DECKING SUPPORT, REFER TO DETAIL 6 ON DRAWING S0-0-7. REFER TO PLUMBING AND ARCHITECTURAL DRAWINGS FOR OPENING SIZES AND LOCATIONS.

15.) CT INDICATES A COLUMN TERMINATES AT THIS LEVEL.

16.) WF INDICATES A BEND IN THE STEEL BEAM. REFER TO TYPICAL DETAIL 9 ON DRAWING S0-0-7.

17.) OR OR INDICATES A CMU WALL. REFER TO TYPICAL DETAIL 8 ON DRAWING S0-0-4 FOR REINFORCEMENT. DETAIL 6 ON DRAWING S0-0-5 FOR CONNECTION OF SHEAR WALLS TO BEAMS AND COLUMNS, AND DETAIL 7 ON DRAWING S0-0-5 FOR CONNECTIONS TO STEEL BEAMS AND CONCRETE SLABS AT THE TOP OF WALL FOR NON-STRUCTURAL WALLS. REFER TO RELEVANT SECTIONS FOR CONNECTIONS OF SHEAR WALLS TO THE STRUCTURE.

18.) 8" + 2" PC PLANK INDICATES SPAN OF 8" DEEP PRESTRESSED, PRECAST CONCRETE HOLLOW CORE PLANK WITH A MINIMUM 2" OF NORMAL WEIGHT CONCRETE TOPPING. PLANK AND CONCRETE TOPPING SLAB TO BE DESIGNED TO SUPPORT A MINIMUM LIVE LOAD CAPACITY OF 150 PSF. PRECAST CONCRETE PLANK TO BE DESIGNED FOR MINIMUM OF 2 HOUR FIRE RATING.

19.) 10" + 2" PC PLANK INDICATES SPAN OF 10" DEEP PRESTRESSED, PRECAST CONCRETE HOLLOW CORE PLANK WITH A MINIMUM 2" OF NORMAL WEIGHT CONCRETE TOPPING. PLANK AND CONCRETE TOPPING SLAB TO BE DESIGNED TO SUPPORT A MINIMUM LIVE LOAD CAPACITY OF 150 PSF. PRECAST CONCRETE PLANK TO BE DESIGNED FOR MINIMUM OF 2 HOUR FIRE RATING

20.) FOR DIMENSIONS AND ELEVATIONS NOT GIVEN REFER TO ARCHITECTURAL DRAWINGS.

21.) WF INDICATES A SPLICE CONNECTION ALONG A CONTINUOUS STEEL BEAM. DESIGN SPLICE CONNECTION FOR FULL CAPACITY OF STEEL BEAM.

22.) INDICATES A SLAB DEPRESSION. REFER TO DETAILS 1 ON DRAWING S0-0-6.

23.) 9/16" INDICATES SPAN DIRECTION OF 9/16" DEEP, 20 GAGE GALVANIZED STEEL ROOF DECK.

24.) XX"xXX" INDICATES OPENING IN WEB OF STEEL BEAM FOR MECH/ ELECT/PLUMB/ FIRE PROTECT/ ETC COORDINATE WITH APPLICABLE DRAWING FOR OPENING SIZE. SEE TYPICAL DETAIL 5 AND 6 ON S0-0-6 FOR ADDITIONAL INFORMATION.

25.) 3" INDICATES SPAN DIRECTION OF 3" DEEP, 20 GAGE TYPE N, GALVANIZED STEEL ROOF DECK.

FRAMING ELEVATION NOTES:

1.) TYPICAL TOP-OF-CONCRETE TOPPING ELEVATION = (89' - 6") AT THE MEZZANINE FLOOR LEVELS, IN THE AREAS BOUNDED BY GRIDS (DD) - (EE) AND (2) - (9); AND GRIDS (DD) - (FF) AND (15) - (20).

2.) FRAMING ELEVATIONS ARE BASED ON TYPICAL BOTTOM-OF-PLANK ELEVATION = (88'-8"), SHOWN ON THE ARCHITECTURAL DRAWINGS.

3.) COORDINATE ALL ELEVATIONS WITH ARCHITECTURAL DRAWINGS.

FIREPROOFING NOTES:

1. STEEL COLUMNS, SHOWN ON THIS DRAWING, SHALL RECEIVE 2-HOUR FIRE RATING BY CEMENTITIOUS FIREPROOFING UNLESS INDICATED AS A ROUND HSS COLUMN. EXPOSED TO VIEW PORTION OF ROUND HSS COLUMNS SHALL RECEIVE 2-HOUR FIRE RATING BY INTUMESCENT MASTIC FIREPROOFING. CONCEALED FROM VIEW PORTION OF ROUND HSS COLUMN SHALL RECEIVE 2-HOUR FIRE RATING BY CEMENTITIOUS FIREPROOFING.

2. BRACED FRAME SHOWN ALONG COLUMN GRID AA BETWEEN GRIDS 6 AND 11, SHALL RECEIVE 2-HOUR RATING BY CEMENTITIOUS FIREPROOFING. ALL OTHER EXPOSED TO VIEW BRACED FRAMES SHOWN ON THIS DRAWING, SHALL RECEIVE 2-HOUR RATING BY INTUMESCENT MASTIC FIREPROOFING.

3. COORDINATE FIREPROOFING REQUIREMENTS WITH THE SPECIFICATIONS AND ARCHITECTURAL DRAWINGS.

BRACE FRAME KEY

0" TYP — WF / BF-X	INDICATES A BRACE FRAME ABOVE AND BELOW LEVEL
0" TYP — BF-X / WF	INDICATES A BRACE FRAME ABOVE LEVEL
0" TYP — WF / BF-X	INDICATES A BRACE FRAME BELOW LEVEL

DRA

Drummey Rosane Anderson, Inc.

225 Oakland Road
Studio 205
South Windsor, CT
06074

260 Charles Street
Studio 300
Waltham, MA
02453

Planning | Architecture | Interior Design

Tel: 617.964.1700
www.draiwa.com

NORTHEAST METRO TECH

100 Hemlock Rd,
Wakefield, MA 01880

EDG
Engineers Design Group Inc.
Structural Engineers
389 Main Street, Suite 401
Malden, MA 02148
(781)396-9007
EDG@EDGINC.COM

REVISION LIST

SS-S-1	4/14/2023	STRUCTURAL STEEL ADDENDUM 1

FOR REFERENCE ONLY
SCOPE OF WORK ON THIS DRAWING IS A PART OF EARLY STRUCTURAL BID PACKAGE

© COPYRIGHT 2021 DRUMMEY ROSANE ANDERSON, INC.

MSBA 90% CD SUBMISSION

MAY 12, 2023

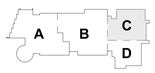

KEY PLAN

PROJECT NORTH

MAGNETIC NORTH

MEZZANINE FLOOR FRAMING PLAN - AREA C

Scale: 1/8" = 1'-0"
Job No.: 20202
Drawn By: EDG
Date: MAY 12, 2023

S1-1-0MC

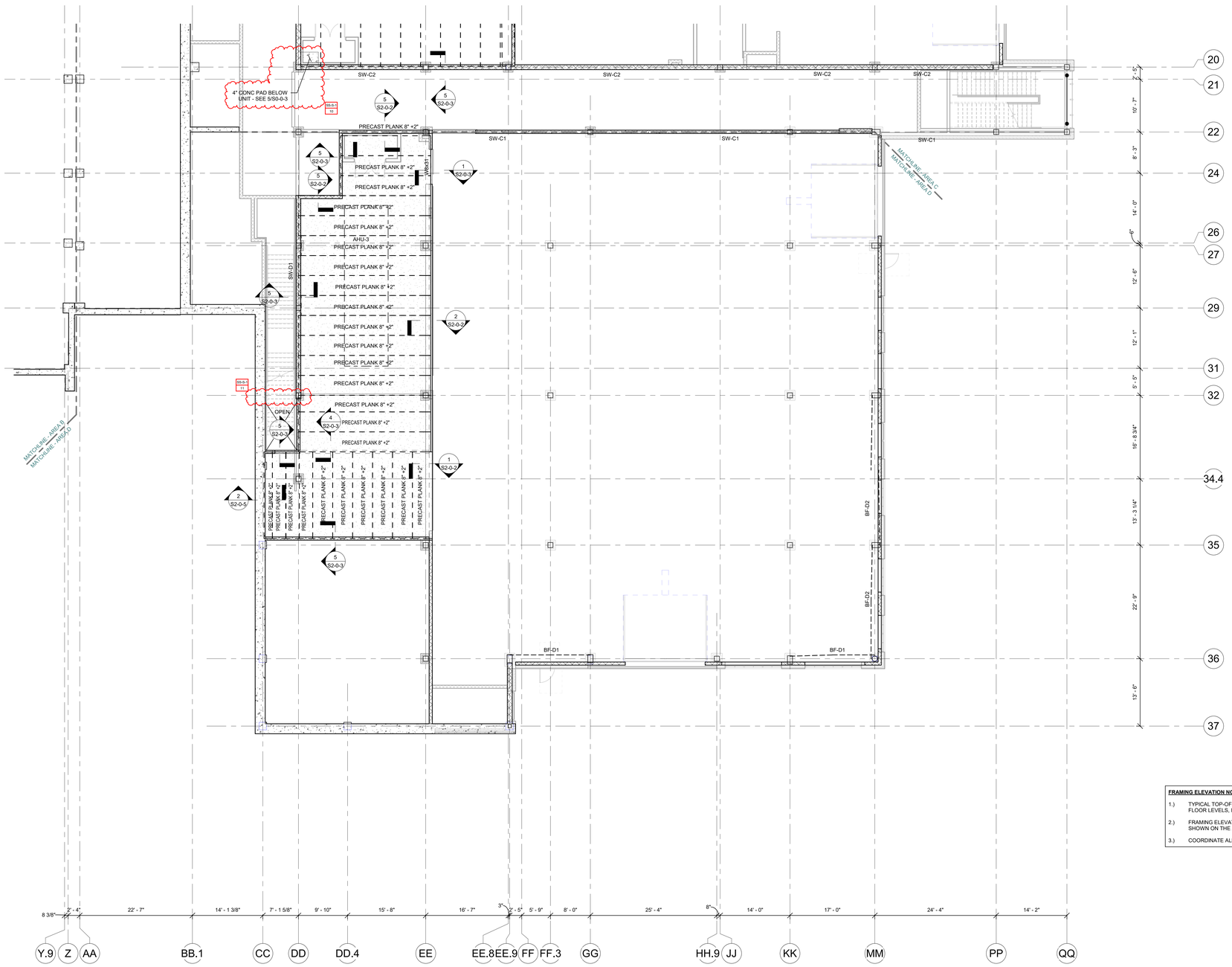

FRAMING NOTES:

1.) FOR GENERAL NOTES AND TYPICAL DETAILS SEE DRAWINGS S0-0-1, S0-0-2, S0-0-3, S0-0-4, S0-0-5 , S0-0-6, S0-0-7 AND S0-0-8.

2.) REFER TO ARCHITECTURAL DRAWINGS FOR ELEVATIONS AND VERTICAL DIMENSIONS. PITCH ALL STEEL UNIFORMLY TO LOW POINTS AT THE COLUMNS AND BENT BEAMS AS SHOWN ON THE ARCHITECTURAL DRAWINGS.

3.) BF-1 ETC... INDICATES A BRACED BAY. REFER TO BRACED FRAME ELEVATIONS AND DETAILS ON DRAWINGS S4-0-1, S4-0-2, S4-0-3, S4-0-4, S4-0-5, S4-0-6, S4-0-7 AND S4-0-8 FOR ADDITIONAL INFORMATION.

4.) [XX] INDICATES THE NUMBER OF 3/4" DIAMETER x 4 1/4" LONG HEADED STUDS WELDED TO THE TOP FLANGE OF THE BEAM. SPACE STUDS EVENLY ALONG THE BEAM UNLESS NOTED OTHERWISE.

5.) INDICATES A MOMENT CONNECTION TO DEVELOP THE FULL CAPACITY OF THE MEMBER. REFER TO TYPICAL DETAILS 7, 8 AND 9 ON DRAWING S0-0-6.

6.) INDICATES A 5/16" FILLET WELD ALL AROUND. (HSS BEAM TO HSS COLUMN) WHERE BEAM DIMENSIONS EXCEED COLUMN DIMENSIONS PROVIDE 1/2" THICK STEEL CAP PLATE TO ACHIEVE ALL AROUND WELD. REFER TO TYPICAL DETAIL 2 ON DRAWING S0-0-7.

7.) < X" > INDICATES UPWARD CAMBER AT THE MID-SPAN OF THE MEMBER.

8.) 5-1/4" INDICATES SPAN DIRECTION OF 2" DEEP, 20 GAGE GALVANIZED COMPOSITE STEEL DECK WITH 3 1/4" LIGHT WEIGHT CONCRETE TOPPING. TOTAL THICKNESS = 5 1/4". REINFORCE WITH 6x6 - W2.1xW2.1 WWR.

9.) 1 1/2" INDICATES SPAN DIRECTION OF 1 1/2" DEEP, 20 GAGE TYPE B, GALVANIZED STEEL ROOF DECK.

10.) 3" NA INDICATES SPAN DIRECTION OF 3" DEEP, 20 GAGE TYPE NA, GALVANIZED ACOUSTIC STEEL ROOF DECK.

11.) 4" LW INDICATES SPAN DIRECTION OF 1 1/2" DEEP, 20 GAGE GALVANIZED COMPOSITE STEEL DECK WITH 2 1/2" LIGHT WEIGHT CONCRETE TOPPING. TOTAL THICKNESS = 4". REINFORCE WITH 6x6 - W2.1xW2.1 WWR.

12.) FOR EXACT NUMBER, SIZE, AND LOCATION OF OPENING IN STEEL DECKING REFER TO MECHANICAL AND ARCHITECTURAL DRAWINGS. FOR FRAMING INFORMATION, REFER TO DETAILS 1, 2 AND 3 ON DRAWING S0-0-8.

13.) 6" HATCHED AREA INDICATES LOCATION OF CONCRETE SLAB WITH 3" DEEP, 18 GAGE GALVANIZED COMPOSITE STEEL DECK WITH 4" NORMAL WEIGHT CONCRETE TOPPING. TOTAL THICKNESS = 6". REINFORCE WITH 6x6 - W2.1xW2.1 WWR. REFER TO TYPICAL DETAIL 5 ON DRAWING S0.07 FOR ADDITIONAL INFORMATION. USE 3/4" DIA x 5" LONG HEADED STUDS.

14.) INDICATES A ROOF DRAIN. REFER TO TYPICAL STRUCTURAL DETAILS 1 AND 2 ON DRAWING S0-0-8 AND DETAIL 1 ON DRAWING S0-0-8. FOR DECKING SUPPORT, REFER TO DETAIL 6 ON DRAWING S0-0-7. REFER TO PLUMBING AND ARCHITECTURAL DRAWINGS FOR OPENING SIZES AND LOCATIONS.

15.) CT INDICATES A COLUMN TERMINATES AT THIS LEVEL.

16.) WF INDICATES A BEND IN THE STEEL BEAM. REFER TO TYPICAL DETAIL 9 ON DRAWING S0-0-7.

17.) OR / OR INDICATES A CMU WALL. REFER TO TYPICAL DETAIL 8 ON DRAWING S0-0-4 FOR REINFORCEMENT, DETAIL 6 ON DRAWING S0-0-5 FOR CONNECTION OF SHEAR WALLS TO BEAMS AND COLUMNS, AND DETAIL 7 ON DRAWING S0-0-5 FOR CONNECTIONS TO STEEL BEAMS AND CONCRETE SLABS AT THE TOP OF WALL FOR NON-STRUCTURAL WALLS. REFER TO RELEVANT SECTIONS FOR CONNECTIONS OF SHEAR WALLS TO THE STRUCTURE.

18.) 8" + 2" PC PLANK INDICATES SPAN OF 8" DEEP PRESTRESSED, PRECAST CONCRETE HOLLOW CORE PLANK WITH A MINIMUM 2" OF NORMAL WEIGHT CONCRETE TOPPING. PLANK AND CONCRETE TOPPING SLAB TO BE DESIGNED TO SUPPORT A MINIMUM LIVE LOAD CAPACITY OF 150 PSF. PRECAST CONCRETE PLANK TO BE DESIGNED FOR MINIMUM OF 2 HOUR FIRE RATING.

19.) 10" + 2" PC PLANK INDICATES SPAN OF 10" DEEP PRESTRESSED, PRECAST CONCRETE HOLLOW CORE PLANK WITH A MINIMUM 2" OF NORMAL WEIGHT CONCRETE TOPPING. PLANK AND CONCRETE TOPPING SLAB TO BE DESIGNED TO SUPPORT A MINIMUM LIVE LOAD CAPACITY OF 150 PSF. PRECAST CONCRETE PLANK TO BE DESIGNED FOR MINIMUM OF 2 HOUR FIRE RATING

20.) FOR DIMENSIONS AND ELEVATIONS NOT GIVEN REFER TO ARCHITECTURAL DRAWINGS.

21.) WF INDICATES A SPLICE CONNECTION ALONG A CONTINUOUS STEEL BEAM. DESIGN SPLICE CONNECTION FOR FULL CAPACITY OF STEEL BEAM.

22.) INDICATES A SLAB DEPRESSION. REFER TO DETAILS 1 ON DRAWING S0-0-6.

23.) 9/16" INDICATES SPAN DIRECTION OF 9/16" DEEP, 20 GAGE GALVANIZED STEEL ROOF DECK.

24.) XX"xXX" INDICATES OPENING IN WEB OF STEEL BEAM FOR MECH/ ELECT/PLUMB/ FIRE PROTECT/ ETC COORDINATE WITH APPLICABLE DRAWING FOR OPENING SIZE. SEE TYPICAL DETAIL 5 AND 6 ON S0-0-6. FOR ADDITIONAL INFORMATION.

25.) 3" INDICATES SPAN DIRECTION OF 3" DEEP, 20 GAGE TYPE N, GALVANIZED STEEL ROOF DECK.

FRAMING ELEVATION NOTES:

1.) TYPICAL TOP-OF-CONCRETE TOPPING ELEVATION = (89' - 6") AT THE MEZZANINE FLOOR LEVELS, IN THE AREA BOUNDED BY GRIDS (CC) - (EE) AND (22) - (35).

2.) FRAMING ELEVATIONS ARE BASED ON TYPICAL BOTTOM-OF-PLANK ELEVATION = (88' - 8"), SHOWN ON THE ARCHITECTURAL DRAWINGS.

3.) COORDINATE ALL ELEVATIONS WITH ARCHITECTURAL DRAWINGS.

FIREPROOFING NOTES:

1. STEEL COLUMNS, SHOWN ON THIS DRAWING, SHALL RECEIVE 2-HOUR FIRE RATING BY CEMENTITIOUS FIREPROOFING UNLESS INDICATED AS A ROUND HSS COLUMN. EXPOSED TO VIEW PORTION OF ROUND HSS COLUMNS SHALL RECEIVE 2-HOUR FIRE RATING BY INTUMESCENT MASTIC FIREPROOFING. CONCEALED FROM VIEW PORTION OF ROUND HSS COLUMN SHALL RECEIVE 2-HOUR FIRE RATING BY CEMENTITIOUS FIREPROOFING.

2. EXPOSED TO VIEW BRACED FRAMES SHOWN ON THIS DRAWING, SHALL RECEIVE 2-HOUR RATING BY INTUMESCENT MASTIC FIREPROOFING.

3. COORDINATE FIREPROOFING REQUIREMENTS WITH THE SPECIFICATIONS AND ARCHITECTURAL DRAWINGS.

BRACE FRAME KEY

0" TYP, WF, BF-X		INDICATES A BRACE FRAME ABOVE AND BELOW LEVEL
0" TYP, BF-X, WF		INDICATES A BRACE FRAME ABOVE LEVEL
0" TYP, WF, BF-X		INDICATES A BRACE FRAME BELOW LEVEL

DRA

Drummey Rosane Anderson, Inc.

225 Oakland Road
Studio 205
South Windsor, CT
06074

260 Charles Street
Studio 300
Waltham, MA
02453

Planning | Architecture | Interior Design

Tel: 617-964-1700
www.draiwa.com

NORTHEAST METRO TECH

100 Hemlock Rd,
Wakefield, MA 01880

EDG

Engineers Design Group Inc.
Structural Engineers
389 Main Street, Suite 401
Malden, MA 02148
(781)396-9007
EDG@EDGINC.COM

REVISION LIST

SS-S-1	4/14/2023	STRUCTURAL STEEL ADDENDUM 1

FOR REFERENCE ONLY
SCOPE OF WORK ON THIS DRAWING IS A PART OF EARLY STRUCTURAL BID PACKAGE

© COPYRIGHT 2021 DRUMMEY ROSANE ANDERSON, INC.

MSBA 90% CD SUBMISSION

MAY 12, 2023

KEY PLAN

PROJECT NORTH | MAGNETIC NORTH

MEZZANINE FLOOR FRAMING PLAN - AREA D

Scale: 1/8" = 1'-0"
Job No.: 20202
Drawn By: EDG
Date: MAY 12, 2023

S1-1-0MD

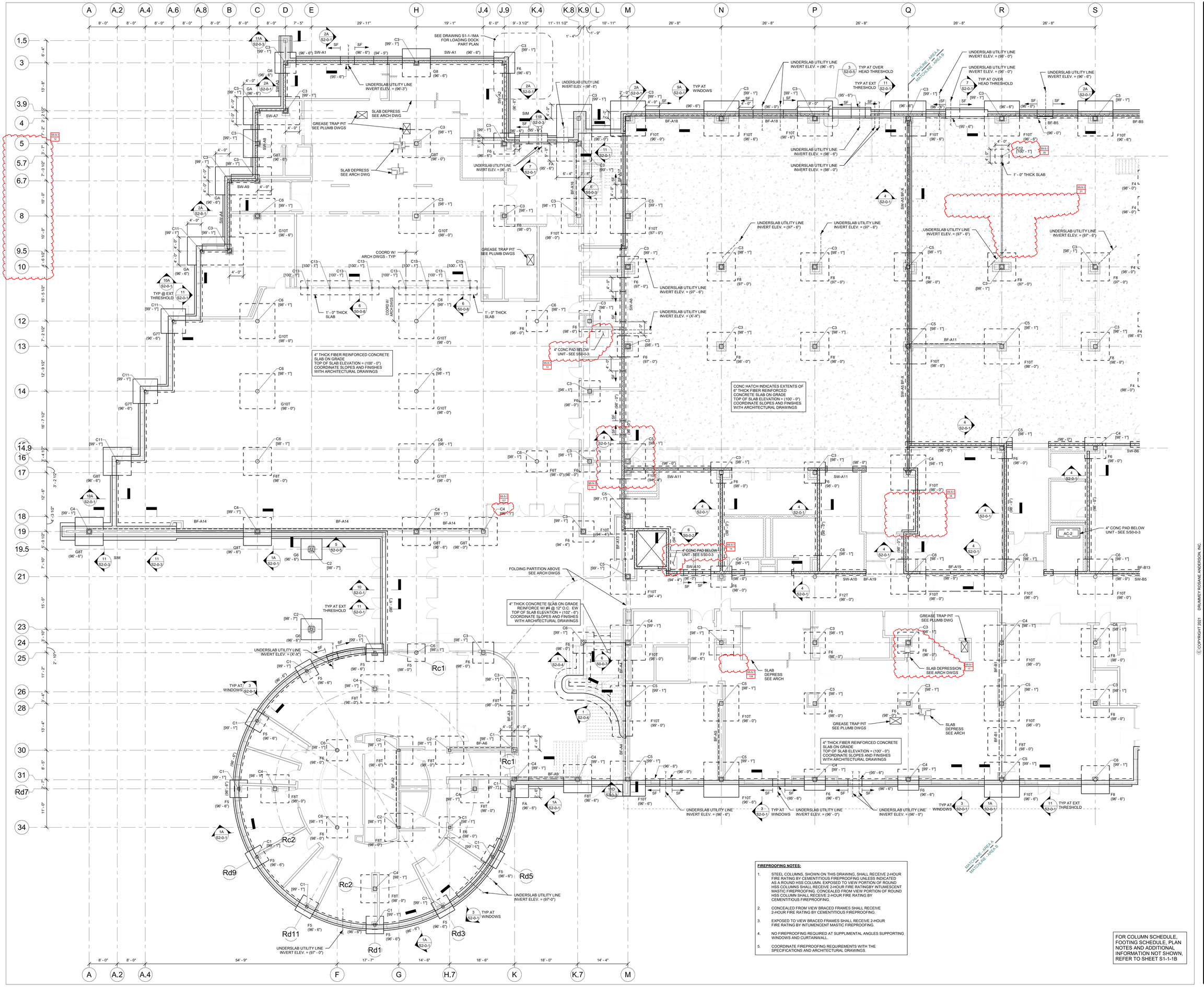

FIREPROOFING NOTES:

1. STEEL COLUMNS, SHOWN ON THIS DRAWING, SHALL RECEIVE 2-HOUR FIRE RATING BY CEMENTITIOUS FIREPROOFING UNLESS INDICATED AS A ROUND HSS COLUMN. EXPOSED TO VIEW PORTION OF ROUND HSS COLUMNS SHALL RECEIVE 2-HOUR FIRE RATINGBY INTUMESCENT MASTIC FIREPROOFING. CONCEALED FROM VIEW PORTION OF ROUND HSS COLUMN SHALL RECEIVE 2-HOUR FIRE RATING BY CEMENTITIOUS FIREPROOFING.
2. CONCEALED FROM VIEW BRACED FRAMES SHALL RECEIVE 2-HOUR FIRE RATING BY CEMENTITIOUS FIREPROOFING.
3. EXPOSED TO VIEW BRACED FRAMES SHALL RECEIVE 2-HOUR FIRE RATING BY INTUMENCENT MASTIC FIREPROOFING.
4. NO FIREPROOFING REQUIRED AT SUPPLIMENTAL ANGLES SUPPORTING WINDOWS AND CURTAINWALL.
5. COORDINATE FIREPROOFING REQUIREMENTS WITH THE SPECIFICATIONS AND ARCHITECTURAL DRAWINGS.

FOR COLUMN SCHEDULE, FOOTING SCHEDULE, PLAN NOTES AND ADDITIONAL INFORMATION NOT SHOWN, REFER TO SHEET S1-1-1B

DRA

Drummey Rosane Anderson, Inc.

225 Oakland Road
Studio 205
South Windsor, CT
06074

260 Charles Street
Studio 300
Waltham, MA
02453

Planning | Architecture | Interior Design

Tel: 617.964.1700
www.draiwa.com

NORTHEAST METRO TECH

100 Hemlock Rd,
Wakefield, MA 01880

EDG

Engineers Design Group Inc.
Structural Engineers
389 Main Street, Suite 401
Malden, MA 02148
(781)396-9007
EDG@EDGINC.COM

REVISION LIST

SS-S-1	4/14/2023	STRUCTURAL STEEL ADDENDUM 1

FOR REFERENCE ONLY
SCOPE OF WORK ON THIS DRAWING IS A PART OF EARLY STRUCTURAL BID PACKAGE

© COPYRIGHT 2021 DRUMMEY ROSANE ANDERSON, INC.

MSBA 90% CD SUBMISSION

MAY 12, 2023

KEY PLAN

PROJECT NORTH

MAGNETIC NORTH

FIRST FLOOR FOUNDATION PLAN - AREA A

Scale: 1/8" = 1'-0"
Job No.: 20202
Drawn By: EDG
Date: MAY 12, 2023

S1-1-1A

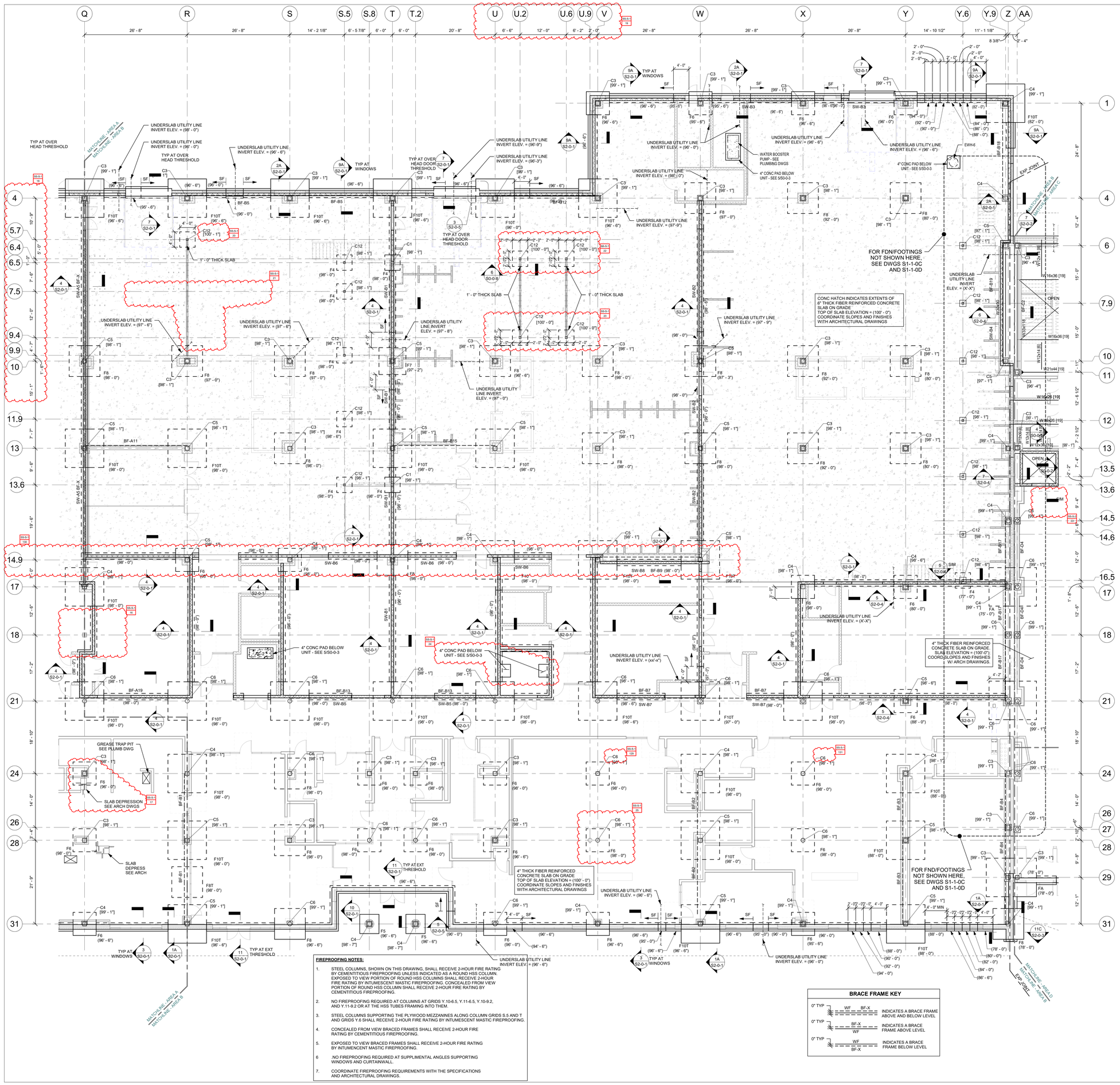

FIREPROOFING NOTES:

1. STEEL COLUMNS, SHOWN ON THIS DRAWING, SHALL RECEIVE 3-HOUR FIRE RATING BY CEMENTITIOUS FIREPROOFING UNLESS INDICATED AS A ROUND HSS COLUMN. EXPOSED TO VIEW PORTION OF ROUND HSS COLUMNS SHALL RECEIVE 2-HOUR FIRE RATING BY INTUMESCENT MASTIC FIREPROOFING. CONCEALED FROM VIEW PORTION OF ROUND HSS COLUMN SHALL RECEIVE 2-HOUR FIRE RATING BY CEMENTITIOUS FIREPROOFING.
2. NO FIREPROOFING REQUIRED AT COLUMNS AT GRIDS Y.10-6.5, Y.11-6.5, Y.10-9.2, AND Y.11-9.2 OR AT THE HSS TUBES FRAMING INTO THEM.
3. STEEL COLUMNS SUPPORTING THE PLYWOOD MEZZANINES ALONG COLUMN GRIDS S.5 AND T AND GRIDS Y.6 SHALL RECEIVE 2-HOUR FIRE RATING BY INTUMESCENT MASTIC FIREPROOFING.
4. CONCEALED FROM VIEW BRACED FRAMES SHALL RECEIVE 2-HOUR FIRE RATING BY CEMENTITIOUS FIREPROOFING.
5. EXPOSED TO VIEW BRACED FRAMES SHALL RECEIVE 2-HOUR FIRE RATING BY INTUMENCENT MASTIC FIREPROOFING.
6. NO FIREPROOFING REQUIRED AT SUPPLIMENTAL ANGLES SUPPORTING WINDOWS AND CURTAINWALL.
7. COORDINATE FIREPROOFING REQUIREMENTS WITH THE SPECIFICATIONS AND ARCHITECTURAL DRAWINGS.

BRACE FRAME KEY

0" TYP	WF / BF-X	INDICATES A BRACE FRAME ABOVE AND BELOW LEVEL
0" TYP	BF-X / WF	INDICATES A BRACE FRAME ABOVE LEVEL
0" TYP	WF / BF-X	INDICATES A BRACE FRAME BELOW LEVEL

FOUNDATION NOTES:

1.) REFER TO GRADING DRAWINGS FOR PLAN AND GRADE ELEVATIONS THE STRUCTURAL DRAWINGS USES A DATUM OF (100' - 0") AT THE FIRST FLOOR LEVEL, EQUAL TO (163.50') ON THE SITE GRADING PLANS.

2.) FOR GENERAL NOTES AND TYPICAL DETAILS SEE DRAWINGS S0-0-1, S0-0-2, S0-0-3, S0-0-4, S0-0-5 , S0-0-6, S0-0-7 AND S0-0-8.

3.) F3 ETC... INDICATES A FOOTING TYPE, FOR SIZE OF FOOTING AND REINFORCEMENT SEE SCHEDULE ON THIS DRAWING.

4.) TOP OF FOOTING ELEVATION TO BE 3' - 6" MINIMUM BELOW LOWEST ADJACENT FINISHED GRADE AT EXTERIOR CONDITIONS AND 2' - 0" BELOW TOP OF CONCRETE SLAB AT INTERIOR CONDITIONS. ALL OTHER TOP OF FOOTING ELEVATIONS ARE DENOTED AS THUS (x' - x") COMPUTED FROM A DATUM ELEVATION OF 100' - 0" ON PLANS. CONTRACTOR TO COORDINATE AND VERIFY ALL TOP OF FOOTING ELEVATIONS WITH UNDERGROUND PLUMBING SUB-CONTRACTOR'S FIELD LAYOUT.

5.) ALL FOOTING ELEVATIONS NOTED ON PLAN ARE SHOWN ONLY TO ASSIST IN COORDINATION. ALL FOOTING ELEVATIONS MUST BE COORDINATED WITH STRUCTURAL REQUIREMENTS, TYPICAL DETAILS, ARCHITECTURAL, MECHANICAL, ELECTRICAL, AND PLUMBING DRAWINGS.

6.) ALL FOOTINGS TO BE CENTERED UNDER COLUMNS UNLESS NOTED OTHERWISE.

7.) SF INDICATES A STEPPED FOOTING REFER TO DETAIL1 ON DRAWING S0-0-2.

8.) C1 ETC... INDICATES A COLUMN TYPE, FOR SIZE OF COLUMNS AND BASE PLATES SEE SCHEDULE ON THIS DRAWING.

9.) BOTTOM OF BASE PLATE ELEVATION TO BE 1' - 11" MINIMUM BELOW TOP OF CONCRETE SLAB AT INTERIOR CONDITIONS, AND 0' - 11" BELOW TOP OF CONCRETE SLAB AT EXTERIOR CONDITIONS. UNLESS NOTED OTHERWISE AS [XX' - XX"] REFER TO ARCHITECTURAL DRAWINGS FOR BRICK SHELF ELEVATIONS.

10.) FOR UNDER SLAB DRAINAGE AND WALL DRAINS, COORDINATE WITH ARCHITECTURAL, STRUCTURAL, CIVIL, AND PLUMBING DRAWINGS.

11.) INDICATES A DEPRESSED SLAB ON GRADE. REFER TO DETAILS 9 AND 10 ON DRAWING S0-0-2 COORDINATE ALL SLAB DEPRESSIONS WITH REQUIREMENTS ON ARCHITECTURAL DRAWINGS.

12.) FOR TYPICAL EXTERIOR DOOR DETAIL REFER TO DETAIL 6 ON DRAWING S0-0-8 AND RELEVANT SECTIONS.

13.) BF-1 ETC... INDICATES A BRACED BAY. REFER TO BRACED FRAME ELEVATIONS AND DETAILS ON DRAWINGS S4-0-5, S4-0-6, S4-0-7, S4-0-8, AND S4-0-9 FOR ADDITIONAL INFORMATION.

14.) INDICATES A CMU WALL. REFER TO TYPICAL DETAIL 8 ON DRAWING S0-0-4 FOR REINFORCEMENT , DETAIL 6 ON DRAWING S0-0-5 FOR CONNECTION OF SHEAR WALLS TO BEAMS AND COLUMNS AND DETAIL 7 ON DRAWING S0-0-5 FOR CONNECTIONS TO STEEL BEAMS AND CONCRETE SLABS AT THE TOP OF WALL FOR NON-STRUCTURAL WALLS. REFER TO RELEVANT SECTIONS FOR CONNECTIONS OF SHEAR WALLS TO THE STRUCTURE.

15.) FOR DIMENSIONS AND ELEVATIONS NOT GIVEN REFER TO ARCHITECTURAL DRAWINGS.

16.) INDICATES CONCRETE PIER REFER TO TYPICAL DETAIL 5 ON DRAWING S0-0-2.

17.) INDICATES UNDERGROUND UTILITY LINES PLUMBING THROUGH CONCRETE FOUNDATION WALL TYPICAL. COORDINATE FOOTING ELEVATION WITH PIPE INVERTS AND TYPICAL STRUCTURAL DETAILS.

18.) CONCRETE PIER REINFORCING PER DETAIL 5 ON DRAWING S0-0-2 IS TO BE PROVIDED FOR ALL CONCRETE WALLS SUPPORTING COLUMNS. HORIZONTAL WALL REINFORCING MUST REMAIN CONTINUOUS.

COLUMN SCHEDULE *

MARK	SIZE	BASE PLATE SIZE
C1	HSS8x8x3/8	1" x 16" x 1' - 4"
C2	HSS8x8x1/2	1" x 16" x 1' - 4"
C3	HSS12x12x3/8	1" x 20" x 1' - 8"
C4	HSS12x12x1/2	1" x 20" x 1' - 8"
C5	HSS12x12x5/8	1" x 20" x 1' - 8"
C6	HSS12.75x0.500	1" x 20" x 1' - 8"
C7	HSS20x12x1/2	1 1/2" x 20" x 2' - 4"
C8	HSS8x4x3/8	1" x 16" x 1' - 0"
C9	HSS16x0.500	1 1/2" x 24" x 2' - 0"
C10	HSS12x6x1/2	1 1/2" x 20" x 1' - 2"
C11	HSS10x0.500	1" x 18" x 1' - 6"
C12	HSS6x6x3/8	1" x 14" x 1' - 2"
C13	HSS6x4x3/8	1" x 12" x 1' - 2"

* BASE PLATE LENGTH AND WIDTH SPECIFIED IN SCHEDULE IS THE MINIMUM SIZE FOR A COLUMN THAT IS PART OF A BRACED FRAME . SEE FOUNDATION NOTE ABOVE AND REFER TO DETAILS ON DRAWING S4-0-8 AND S4-0-9 FOR ADDITIONAL INFORMATION.

* PROVIDE 4 - 1" DIA F1554-55S1 ANCHOR RODS TYPICALLY. REFER TO DETAILS ON DRAWING S4-0-8 AND S4-0-9 FOR ADDITIONAL ANCHOR RODS FOR COLUMN RECEIVING BRACING.

FOOTING SCHEDULE F SERIES

MARK	SIZE	REINFORCEMENT
F4	4' - 0" x 4' - 0" x 2' - 0"	6 - #5 BOT EA WAY
F5	5' - 0" x 5' - 0" x 2' - 0"	7 - #5 BOT EA WAY
F6	6' - 0" x 6' - 0" x 2' - 6"	8 - #6 BOT EA WAY
F7	7' - 0" x 7' - 0" x 2' - 6"	9 - #6 BOT EA WAY
F8	8' - 0" x 8' - 0" x 3' - 0"	10 - #8 BOT EA WAY
F9	9' - 0" x 9' - 0" x 3' - 0"	11 - #9 BOT EA WAY
F10	10' - 0" x 10' - 0" x 3' - 6"	12 - #9 BOT EA WAY
F11	11' - 0" x 11' - 0" x 3' - 6"	13 - #10 BOT EA WAY
F12	12' - 0" x 12' - 0" x 4' - 0"	14 - #10 BOT EA WAY
FA	SEE PLAN x 2' - 0"	#8 @ 12"OC TOP AND BOT EA WAY

T INDICATES TOP REINFORCING TO MATCH BOTTOM REINFORCING

FOOTING SCHEDULE G SERIES

MARK	SIZE	REINFORCEMENT
G4	4' - 0" x 4' - 0" x 2' - 0"	5 - #5 BOT EA WAY
G5	5' - 0" x 5' - 0" x 2' - 0"	6 - #5 BOT EA WAY
G6	6' - 0" x 6' - 0" x 2' - 0"	7 - #6 BOT EA WAY
G7	7' - 0" x 7' - 0" x 2' - 0"	8 - #6 BOT EA WAY
G8	8' - 0" x 8' - 0" x 2' - 0"	9 - #6 BOT EA WAY
G9	9' - 0" x 9' - 0" x 2' - 6"	10 - #7 BOT EA WAY
G10	10' - 0" x 10' - 0" x 2' - 6"	11 - #7 BOT EA WAY
G11	11' - 0" x 11' - 0" x 2' - 6"	12 - #8 BOT EA WAY
G12	12' - 0" x 12' - 0" x 3' - 0"	13 - #8 BOT EA WAY
G13	13' - 0" x 13' - 0" x 3' - 0"	14 - #9 BOT EA WAY
G14	14' - 0" x 14' - 0" x 3' - 0"	15 - #9 BOT EA WAY
G15	15' - 0" x 15' - 0" x 3' - 0"	16 - #9 BOT EA WAY
GA	SEE PLAN x 2' - 0"	#8 @ 12"OC TOP AND BOT EA WAY

T INDICATES TOP REINFORCING TO MATCH BOTTOM REINFORCING

DRA

Drummey Rosane Anderson, Inc.

225 Oakland Road
Studio 205
South Windsor, CT
06074

260 Charles Street
Studio 300
Waltham, MA
02453

Planning | Architecture | Interior Design

Tel: 617-964-1700
www.draiwa.com

NORTHEAST METRO TECH

100 Hemlock Rd,
Wakefield, MA 01880

EDG

Engineers Design Group Inc.
Structural Engineers
389 Main Street, Suite 401
Malden, MA 02148
(781)396-9007
EDG@EDGINC.COM

REVISION LIST

SS-S-1	4/14/2023	STRUCTURAL STEEL ADDENDUM 1
SS-S-2	4/21/2023	STRUCTURAL STEEL ADDENDUM 2

© COPYRIGHT 2021 DRUMMEY ROSANE ANDERSON, INC.

FOR REFERENCE ONLY
SCOPE OF WORK ON THIS DRAWING IS A PART OF EARLY STRUCTURAL BID PACKAGE

MSBA 90% CD SUBMISSION

MAY 12, 2023

KEY PLAN

PROJECT NORTH | MAGNETIC NORTH

FIRST FLOOR FOUNDATION PLAN - AREA B

Scale: 1/8" = 1'-0"
Job No.: 20202
Drawn By: EDG
Date: MAY 12, 2023

S1-1-1B

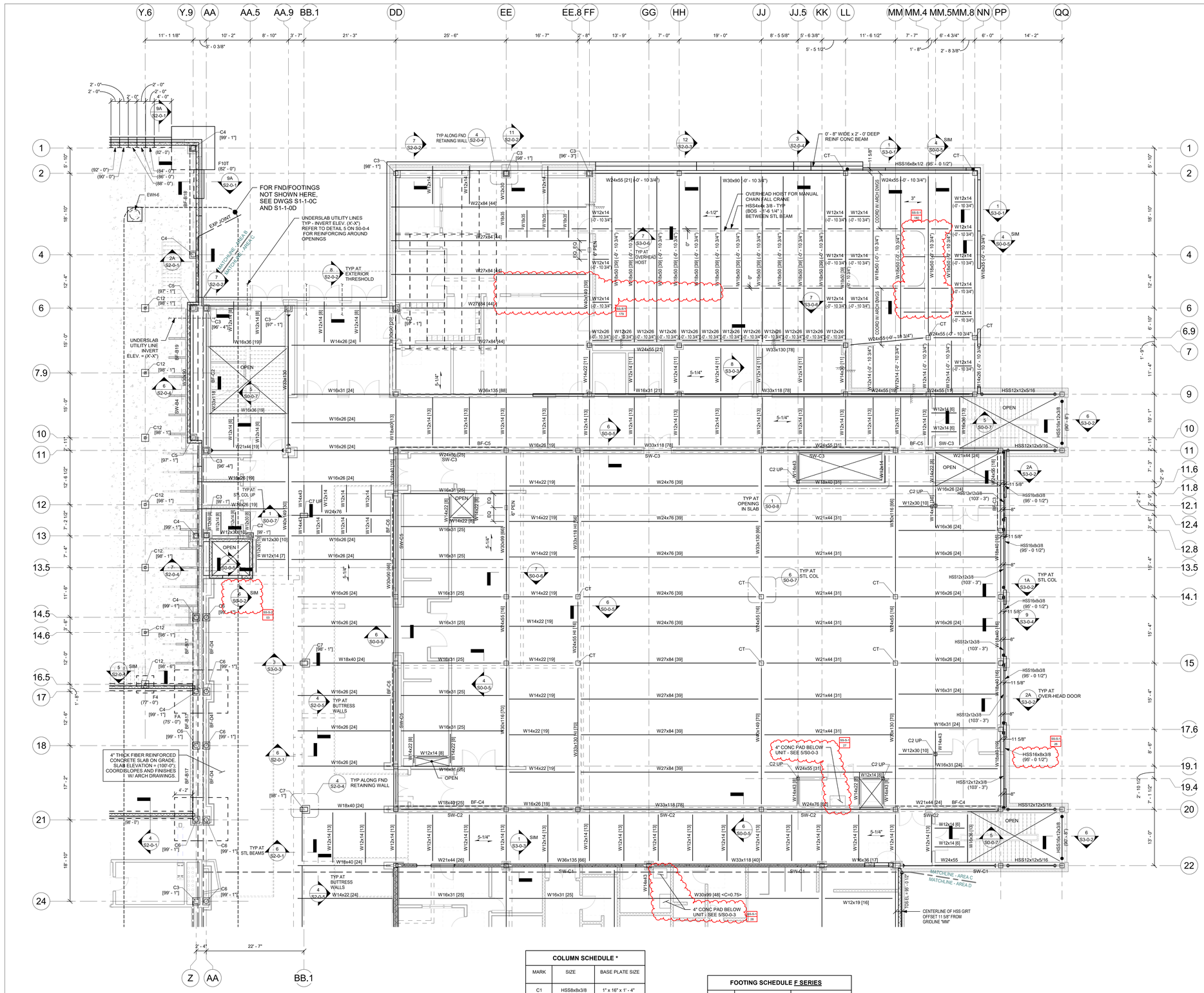

FOUNDATION NOTES:

1.) REFER TO GRADING DRAWINGS FOR PLAN AND GRADE ELEVATIONS THE STRUCTURAL DRAWINGS USES A DATUM OF (100' - 0") AT THE FIRST FLOOR LEVEL, EQUAL TO (163.50') ON THE SITE GRADING PLANS.

2.) FOR GENERAL NOTES AND TYPICAL DETAILS SEE DRAWINGS S0-0-1, S0-0-2, S0-0-3, S0-0-4, S0-0-5 , S0-0-6, S0-0-7 AND S0-0-8.

3.) F3 ETC... INDICATES A FOOTING TYPE. FOR SIZE OF FOOTING AND REINFORCEMENT SEE SCHEDULE ON THIS DRAWING.

4.) TOP OF FOOTING ELEVATION TO BE 3' - 6" MINIMUM BELOW LOWEST ADJACENT FINISHED GRADE AT EXTERIOR CONDITIONS AND 2' - 0" BELOW TOP OF CONCRETE SLAB AT INTERIOR CONDITIONS. ALL OTHER TOP OF FOOTING ELEVATIONS ARE DENOTED AS THUS (X' - x") COMPUTED FROM A DATUM ELEVATION OF 100' - 0" ON PLANS. CONTRACTOR TO COORDINATE AND VERIFY ALL TOP OF FOOTING ELEVATIONS WITH UNDERGROUND PLUMBING SUB-CONTRACTOR'S FIELD LAYOUT.

5.) ALL FOOTING ELEVATIONS NOTED ON PLAN ARE SHOWN ONLY TO ASSIST IN COORDINATION. ALL FOOTING ELEVATIONS MUST BE COORDINATED WITH STRUCTURAL REQUIREMENTS, TYPICAL DETAILS, ARCHITECTURAL, MECHANICAL, ELECTRICAL, AND PLUMBING DRAWINGS.

6.) ALL FOOTINGS TO BE CENTERED UNDER COLUMNS UNLESS NOTED OTHERWISE.

7.) SF INDICATES A STEPPED FOOTING REFER TO DETAIL1 ON DRAWING S0-0-2.

8.) C1 ETC... INDICATES A COLUMN TYPE, FOR SIZE OF COLUMNS AND BASE PLATES SEE SCHEDULE ON THIS DRAWING.

9.) BOTTOM OF BASE PLATE ELEVATION TO BE 1' - 11" MINIMUM BELOW TOP OF CONCRETE SLAB AT INTERIOR CONDITIONS, AND 0' - 11" BELOW TOP OF CONCRETE SLAB AT EXTERIOR CONDITIONS. UNLESS NOTED OTHERWISE AS [XX' - XX"] REFER TO ARCHITECTURAL DRAWINGS FOR BRICK SHELF ELEVATIONS.

10.) FOR UNDER SLAB DRAINAGE AND WALL DRAINS, COORDINATE WITH ARCHITECTURAL, STRUCTURAL, CIVIL, AND PLUMBING DRAWINGS.

11.) INDICATES A DEPRESSED SLAB ON GRADE. REFER TO DETAILS 9 AND 10 ON DRAWING S0-0-2 COORDINATE ALL SLAB DEPRESSIONS WITH REQUIREMENTS ON ARCHITECTURAL DRAWINGS.

12.) FOR TYPICAL EXTERIOR DOOR DETAIL REFER TO DETAIL 6 ON DRAWING S0-0-8 AND RELEVANT SECTIONS.

13.) BF-1 ETC... INDICATES A BRACED BAY. REFER TO BRACED FRAME ELEVATIONS AND DETAILS ON DRAWINGS S4-0-5, S4-0-6, S4-0-7, S4-0-8, AND S4-0-9 FOR ADDITIONAL INFORMATION.

14.) OR / OR INDICATES A CMU WALL. REFER TO TYPICAL DETAIL 8 ON DRAWING S0-0-4 FOR REINFORCEMENT , DETAIL 6 ON DRAWING S0-0-5 FOR CONNECTION OF SHEAR WALLS TO BEAMS AND COLUMNS AND DETAIL 7 ON DRAWING S0-0-5 FOR CONNECTIONS TO STEEL BEAMS AND CONCRETE SLABS AT THE TOP OF WALL FOR NON-STRUCTURAL WALLS. REFER TO RELEVANT SECTIONS FOR CONNECTIONS OF SHEAR WALLS TO THE STRUCTURE.

15.) FOR DIMENSIONS AND ELEVATIONS NOT GIVEN REFER TO ARCHITECTURAL DRAWINGS.

16.) INDICATES CONCRETE PIER REFER TO TYPICAL DETAIL 5 ON DRAWING S0-0-2.

17.) INDICATES UNDERGROUND UTILITY LINES PLUMBING THROUGH CONCRETE FOUNDATION WALL TYPICAL. COORDINATE FOOTING ELEVATION WITH PIPE INVERTS AND TYPICAL STRUCTURAL DETAILS.

18.) CONCRETE PIER REINFORCING PER DETAIL 5 ON DRAWING S0-0-2 IS TO BE PROVIDED FOR ALL CONCRETE WALLS SUPPORTING COLUMNS. HORIZONTAL WALL REINFORCING MUST REMAIN CONTINUOUS.

FRAMING NOTES:

1.) FOR GENERAL NOTES AND TYPICAL DETAILS SEE DRAWINGS S0-0-1, S0-0-2, S0-0-3, S0-0-4, S0-0-5 , S0-0-6, S0-0-7 AND S0-0-8.

2.) REFER TO ARCHITECTURAL DRAWINGS FOR ELEVATIONS AND VERTICAL DIMENSIONS. PITCH ALL STEEL UNIFORMLY TO LOW POINTS AT THE COLUMNS AND BENT BEAMS AS SHOWN ON THE ARCHITECTURAL DRAWINGS.

3.) BF-1 ETC... INDICATES A BRACED BAY. REFER TO BRACED FRAME ELEVATIONS AND DETAILS ON DRAWINGS S4-0-1, S4-0-2, S4-0-3, S4-0-4, S4-0-5, S4-0-6, S4-0-7 AND S4-0-8 FOR ADDITIONAL INFORMATION.

4.) [XX] INDICATES THE NUMBER OF 3/4" DIAMETER x 4 1/4" LONG HEADED STUDS WELDED TO THE TOP FLANGE OF THE BEAM. SPACE STUDS EVENLY ALONG THE BEAM UNLESS NOTED OTHERWISE.

5.) INDICATES A MOMENT CONNECTION TO DEVELOP THE FULL CAPACITY OF THE MEMBER. REFER TO TYPICAL DETAILS 7, 8 AND 9 ON DRAWING S0-0-6.

6.) INDICATES A 5/16" FILLET WELD ALL AROUND. (HSS BEAM TO HSS COLUMN) WHERE BEAM DIMENSIONS EXCEED COLUMN DIMENSIONS PROVIDE 1/2" THICK STEEL CAP PLATE TO ACHIEVE ALL AROUND WELD. REFER TO TYPICAL DETAIL 2 ON DRAWING S0-0-7.

7.) < X" > INDICATES UPWARD CAMBER AT THE MID-SPAN OF THE MEMBER.

8.) 5-1/4" INDICATES SPAN DIRECTION OF 2" DEEP, 20 GAGE GALVANIZED COMPOSITE STEEL DECK WITH 3 1/4" LIGHT WEIGHT CONCRETE TOPPING. TOTAL THICKNESS = 5 1/4". REINFORCE WITH 6x6 - W2.1xW2.1 WWR.

9.) 1 1/2" INDICATES SPAN DIRECTION OF 1 1/2" DEEP, 20 GAGE TYPE B, GALVANIZED STEEL ROOF DECK.

10.) 3" / NA INDICATES SPAN DIRECTION OF 3" DEEP, 20 GAGE TYPE NA, GALVANIZED ACOUSTIC STEEL ROOF DECK. SS-S-2 21

11.) 4" / LW INDICATES SPAN DIRECTION OF 1 1/2" DEEP, 20 GAGE GALVANIZED COMPOSITE STEEL DECK WITH 2 1/2" LIGHT WEIGHT CONCRETE TOPPING. TOTAL THICKNESS = 4" . REINFORCE WITH 6x6 - W2.1xW2.1 WWR.

12.) FOR EXACT NUMBER, SIZE, AND LOCATION OF OPENING IN STEEL DECKING REFER TO MECHANICAL AND ARCHITECTURAL DRAWINGS. FOR FRAMING INFORMATION, REFER TO DETAILS 1, 2 AND 3 ON DRAWING S0-0-8.

13.) 6" HATCHED AREA INDICATES LOCATION OF CONCRETE SLAB WITH 3" DEEP, 18 GAGE GALVANIZED COMPOSITE STEEL DECK WITH 4" NORMAL WEIGHT CONCRETE TOPPING. TOTAL THICKNESS = 6". REINFORCE WITH 6x6 - W2.1xW2.1 WWR. REFER TO TYPICAL DETAIL 5 ON DRAWING S0.07 FOR ADDITIONAL INFORMATION. USE 3/4" DIA x 5" LONG HEADED STUDS.

14.) ⊗ INDICATES A ROOF DRAIN. REFER TO TYPICAL STRUCTURAL DETAILS 1 AND 2 ON DRAWING S0-0-8 AND DETAIL 1 ON DRAWING S0-0-8. FOR DECKING SUPPORT, REFER TO DETAIL 6 ON DRAWING S0-0-7. REFER TO PLUMBING AND ARCHITECTURAL DRAWINGS FOR OPENING SIZES AND LOCATIONS.

15.) CT INDICATES A COLUMN TERMINATES AT THIS LEVEL.

16.) WF INDICATES A BEND IN THE STEEL BEAM. REFER TO TYPICAL DETAIL 9 ON DRAWING S0-0-7.

17.) OR / OR INDICATES A CMU WALL. REFER TO TYPICAL DETAIL 8 ON DRAWING S0-0-4 FOR REINFORCEMENT, DETAIL 6 ON DRAWING S0-0-5 FOR CONNECTION OF SHEAR WALLS TO BEAMS AND COLUMNS, AND DETAIL 7 ON DRAWING S0-0-5 FOR CONNECTIONS TO STEEL BEAMS AND CONCRETE SLABS AT THE TOP OF WALL FOR NON-STRUCTURAL WALLS. REFER TO RELEVANT SECTIONS FOR CONNECTIONS OF SHEAR WALLS TO THE STRUCTURE.

18.) 8" + 2" PC PLANK INDICATES SPAN OF 8" DEEP PRESTRESSED, PRECAST CONCRETE HOLLOW CORE PLANK WITH A MINIMUM 2" OF NORMAL WEIGHT CONCRETE TOPPING. PLANK AND CONCRETE TOPPING SLAB TO BE DESIGNED TO SUPPORT A MINIMUM LIVE LOAD CAPACITY OF 150 PSF. PRECAST CONCRETE PLANK TO BE DESIGNED FOR MINIMUM OF 2 HOUR FIRE RATING.

19.) 10" + 2" PC PLANK INDICATES SPAN OF 10" DEEP PRESTRESSED, PRECAST CONCRETE HOLLOW CORE PLANK WITH A MINIMUM 2" OF NORMAL WEIGHT CONCRETE TOPPING. PLANK AND CONCRETE TOPPING SLAB TO BE DESIGNED TO SUPPORT A MINIMUM LIVE LOAD CAPACITY OF 150 PSF. PRECAST CONCRETE PLANK TO BE DESIGNED FOR MINIMUM OF 2 HOUR FIRE RATING

20.) FOR DIMENSIONS AND ELEVATIONS NOT GIVEN REFER TO ARCHITECTURAL DRAWINGS.

21.) WF INDICATES A SPLICE CONNECTION ALONG A CONTINUOUS STEEL BEAM. DESIGN SPLICE CONNECTION FOR FULL CAPACITY OF STEEL BEAM.

22.) INDICATES A SLAB DEPRESSION. REFER TO DETAILS 1 ON DRAWING S0-0-6.

23.) 9/16" INDICATES SPAN DIRECTION OF 9/16" DEEP, 20 GAGE GALVANIZED STEEL ROOF DECK.

24.) XX"xXX" INDICATES OPENING IN WEB OF STEEL BEAM FOR MECH/ ELECT/PLUMB/ FIRE PROTECT/ ETC COORDINATE WITH APPLICABLE DRAWING FOR OPENING SIZE. SEE TYPICAL DETAIL 5 AND 6 ON S0-0-6 FOR ADDITIONAL INFORMATION.

25.) 3" INDICATES SPAN DIRECTION OF 3" DEEP, 20 GAGE TYPE N, GALVANIZED STEEL ROOF DECK. SS-S-2 22

COLUMN SCHEDULE *

MARK	SIZE	BASE PLATE SIZE
C1	HSS8x8x3/8	1" x 16" x 1' - 4"
C2	HSS8x8x1/2	1" x 16" x 1' - 4"
C3	HSS12x12x3/8	1" x 20" x 1' - 8"
C4	HSS12x12x1/2	1" x 20" x 1' - 8"
C5	HSS12x12x5/8	1" x 20" x 1' - 8"
C6	HSS12.75x0.500	1" x 20" x 1' - 8"
C7	HSS20x12x1/2	1 1/2" x 20" x 2' - 4"
C8	HSS8x4x3/8	1" x 16" x 1' - 0"
C9	HSS16x0.500	1 1/2" x 24" x 2' - 0"
C10	HSS12x6x1/2	1 1/2" x 20" x 1' - 2"
C11	HSS10x0.500	1" x 18" x 1' - 6"
C12	HSS6x6x3/8	1" x 14" x 1' - 2"
C13	HSS8x4x3/8	1" x 12" x 1' - 2"

* BASE PLATE LENGTH AND WIDTH SPECIFIED IN SCHEDULE IS THE MINIMUM SIZE FOR A COLUMN THAT IS PART OF A BRACED FRAME. SEE FOUNDATION NOTE ABOVE AND REFER TO DETAILS ON DRAWING S4-0-8 AND S4-0-9 FOR ADDITIONAL INFORMATION.

* PROVIDE 4 - 1" DIA F1554-55S1 ANCHOR RODS TYPICALLY. REFER TO DETAILS ON DRAWING S4-0-8 AND S4-0-9 FOR ADDITIONAL ANCHOR RODS FOR COLUMN RECEIVING BRACING.

FOOTING SCHEDULE F SERIES

MARK	SIZE	REINFORCEMENT
F4	4' - 0" x 4' - 0" x 2' - 0"	6 - #5 BOT EA WAY
F5	5' - 0" x 5' - 0" x 2' - 0"	7 - #5 BOT EA WAY
F6	6' - 0" x 6' - 0" x 2' - 6"	8 - #6 BOT EA WAY
F7	7' - 0" x 7' - 0" x 2' - 6"	9 - #6 BOT EA WAY
F8	8' - 0" x 8' - 0" x 3' - 0"	10 - #8 BOT EA WAY
F9	9' - 0" x 9' - 0" x 3' - 0"	11 - #9 BOT EA WAY
F10	10' - 0" x 10' - 0" x 3' - 6"	12 - #9 BOT EA WAY
F11	11' - 0" x 11' - 0" x 3' - 6"	13 - #10 BOT EA WAY
F12	12' - 0" x 12' - 0" x 4' - 0"	14 - #10 BOT EA WAY
FA	SEE PLAN x 2' - 0"	#8 @ 12"OC TOP AND BOT EA WAY

T INDICATES TOP REINFORCING TO MATCH BOTTOM REINFORCING

FIREPROOFING NOTES:

1. STEEL COLUMNS SHOWN ON THIS DRAWING SHALL RECEIVE 2-HOUR FIRE RATING BY CEMENTITIOUS FIREPROOFING UNLESS INDICATED AS A ROUND HSS COLUMN OR BUILT-UP COLUMN ALONG COLUMN GRID BB.1. EXPOSED TO VIEW PORTION OF ROUND HSS COLUMNS SHALL RECEIVE 2-HOUR FIRE RATING BY INTUMESCENT MASTIC FIREPROOFING. CONCEALED FROM VIEW PORTION OF ROUND HSS COLUMN SHALL RECEIVE 2-HOUR FIRE RATING BY CEMENTITIOUS FIREPROOFING. BUILT-UP COLUMNS ALONG GRID BB.1 SHALL RECEIVE 2-HOUR RATING BY INTUMESCENT MASTIC FIREPROOFING.
2. STEEL BEAMS AND KICKERS SHOWN ON THIS DRAWING, SUPPORTING UPPER LEVEL FLOORS SHALL RECEIVE 2-HOUR RATING BY CEMENTITIOUS FIREPROOFING.
3. STEEL BEAMS AND KICKERS SHOWN ON THIS DRAWING, SUPPORTING ROOF SHALL RECEIVE 1-HOUR RATING BY CEMENTITIOUS FIREPROOFING. ROOF DECK TO RECEIVE 1-HOUR FIRE RATING BY CEMENTITOUS FIREPROOFING.
4. CONCEALED FROM VIEW BRACED FRAMES SHALL RECEIVE 2-HOUR FIRE RATING BY CEMENTITIOUS FIREPROOFING.
5. EXPOSED TO VIEW BRACED FRAMES SHALL RECEIVE 2-HOUR FIRE RATING BY INTUMESCENT MASTIC FIREPROOFING.
6. AT STAIRS 4, 6, AND 7, ALL EXPOSED TO VIEW BEAMS AND HSS TUBES SUPPORTING STAIR LANDINGS AND STRINGERS SHALL RECEIVE 2-HOUR RATING BY INTUMESCENT MASTIC FIREPROOFING. NO FIREPROOFING REQUIRED AT SUPPLEMENTAL HSS TUBES SUPPORTING ONLY CURTAINWALL.
7. NO FIREPROOFING REQUIRED AT SUPPLEMENTAL HSS TUBES LOCATED AT THE VOCATIONAL OVERHEAD DOORS.
8. NO FIREPROOFING REQUIRED AT SUPPLEMENTAL HSS TUBES LOCATED AT STOREFRONT, CURTAINWALL, AND FIBERGLASS PANEL HEADS.
9. COORDINATE FIREPROOFING REQUIREMENTS WITH THE SPECIFICATIONS AND ARCHITECTURAL DRAWINGS.

FRAMING ELEVATION NOTES:

1.) TYPICAL UNDERSIDE-OF-DECK ELEVATION = (99' - 6 3/4") AT THE FIRST FLOOR LEVEL, IN THE AREA BOUNDED BY GRIDS (AA) - (QQ) AND (22) - (37). UNLESS NOTED OTHERWISE AS (X' - X"), (+/-X - X"), OR HI/LO.

2.) FRAMING ELEVATIONS ARE BASED ON TOP-OF-FLOOR ELEVATION = (100' - 0"), SHOWN ON THE ARCHITECTURAL DRAWINGS.

3.) COORDINATE ALL ELEVATIONS WITH ARCHITECTURAL DRAWINGS.

4.) SLOPE STEEL UNIFORMLY TO COLUMN ELEVATIONS SHOWN ON PLANS.

BRACE FRAME KEY

0" TYP	WF / BF-X	INDICATES A BRACE FRAME ABOVE AND BELOW LEVEL
0" TYP	BF-X / WF	INDICATES A BRACE FRAME ABOVE LEVEL
0" TYP	WF / BF-X	INDICATES A BRACE FRAME BELOW LEVEL

DRA
Drummey Rosane Anderson, Inc.
225 Oakland Road Studio 205 South Windsor, CT 06074
260 Charles Street Studio 300 Waltham, MA 02453
Planning | Architecture | Interior Design
Tel: 617.964.1700
www.draiwa.com

NORTHEAST METRO TECH

100 Hemlock Rd,
Wakefield, MA 01880

EDG
Engineers Design Group Inc.
Structural Engineers
389 Main Street, Suite 401
Malden, MA 02148
(781)396-9007
EDG@EDGINC.COM

REVISION LIST

SS-S-1	4/14/2023	STRUCTURAL STEEL ADDENDUM 1
SS-S-2	4/21/2023	STRUCTURAL STEEL ADDENDUM 2

FOR REFERENCE ONLY
SCOPE OF WORK ON THIS DRAWING IS A PART OF EARLY STRUCTURAL BID PACKAGE

MSBA 90% CD SUBMISSION

MAY 12, 2023

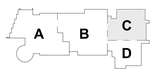

KEY PLAN

PROJECT NORTH

MAGNETIC NORTH

FIRST FLOOR FOUNDATION PLAN - AREA C

Scale: 1/8" = 1'-0"
Job No.: 20202
Drawn By: EDG
Date: MAY 12, 2023

S1-1-1C

© COPYRIGHT 2021 DRUMMEY ROSANE ANDERSON, INC.

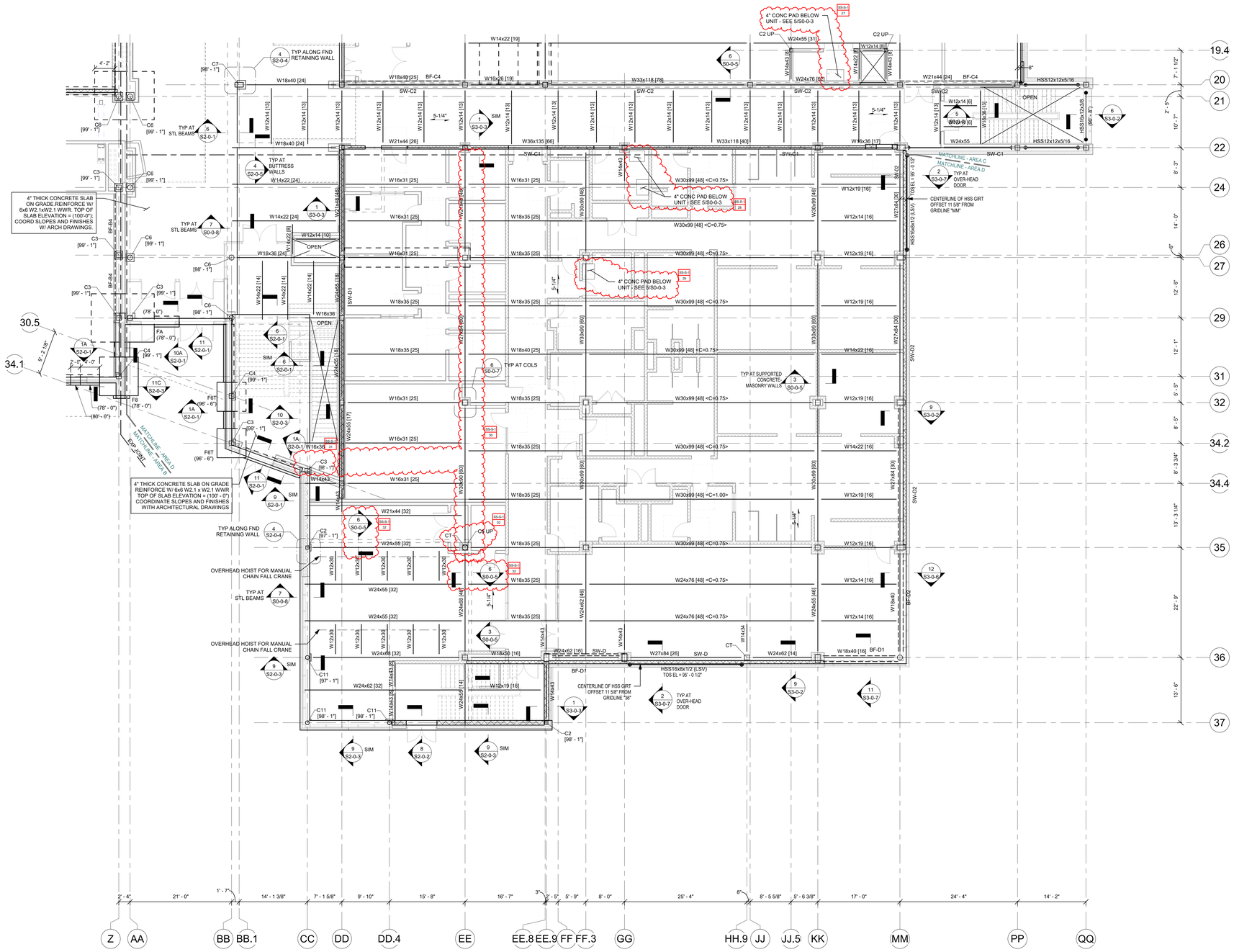

FRAMING NOTES:

1.) FOR GENERAL NOTES AND TYPICAL DETAILS SEE DRAWINGS S0-0-1, S0-0-2, S0-0-3, S0-0-4, S0-0-5 , S0-0-6, S0-0-7 AND S0-0-8.

2.) REFER TO ARCHITECTURAL DRAWINGS FOR ELEVATIONS AND VERTICAL DIMENSIONS. PITCH ALL STEEL UNIFORMLY TO LOW POINTS AT THE COLUMNS AND BENT BEAMS AS SHOWN ON THE ARCHITECTURAL DRAWINGS.

3.) BF-1 ETC... INDICATES A BRACED BAY. REFER TO BRACED FRAME ELEVATIONS AND DETAILS ON DRAWINGS S4-0-1, S4-0-2, S4-0-3, S4-0-4, S4-0-5, S4-0-6, S4-0-7 AND S4-0-8 FOR ADDITIONAL INFORMATION.

4.) [XX] INDICATES THE NUMBER OF 3/4" DIAMETER x 4 1/4" LONG HEADED STUDS WELDED TO THE TOP FLANGE OF THE BEAM. SPACE STUDS EVENLY ALONG THE BEAM UNLESS NOTED OTHERWISE.

5.) INDICATES A MOMENT CONNECTION TO DEVELOP THE FULL CAPACITY OF THE MEMBER. REFER TO TYPICAL DETAILS 7, 8 AND 9 ON DRAWING S0-0-6.

6.) INDICATES A 5/16" FILLET WELD ALL AROUND. (HSS BEAM TO HSS COLUMN) WHERE BEAM DIMENSIONS EXCEED COLUMN DIMENSIONS PROVIDE 1/2" THICK STEEL CAP PLATE TO ACHIEVE ALL AROUND WELD. REFER TO TYPICAL DETAIL 2 ON DRAWING S0-0-7.

7.) < X" > INDICATES UPWARD CAMBER AT THE MID-SPAN OF THE MEMBER.

8.) 5-1/4" INDICATES SPAN DIRECTION OF 2" DEEP, 20 GAGE GALVANIZED COMPOSITE STEEL DECK WITH 3 1/4" LIGHT WEIGHT CONCRETE TOPPING. TOTAL THICKNESS = 5 1/4". REINFORCE WITH 6x6 - W2.1xW2.1 WWR.

9.) 1 1/2" INDICATES SPAN DIRECTION OF 1 1/2" DEEP, 20 GAGE ~~TYPE B, GALVANIZED STEEL ROOF DECK.~~

10.) 3" NA INDICATES SPAN DIRECTION OF 3" DEEP, 20 GAGE TYPE NA, GALVANIZED ACOUSTIC STEEL ROOF DECK. SS-S-2 04

11.) 4" LW INDICATES SPAN DIRECTION OF 1 1/2" DEEP, 20 GAGE GALVANIZED COMPOSITE STEEL DECK WITH 2 1/2" LIGHT WEIGHT CONCRETE TOPPING. TOTAL THICKNESS = 4". REINFORCE WITH 6x6 - W2.1xW2.1 WWR.

12.) FOR EXACT NUMBER, SIZE, AND LOCATION OF OPENING IN STEEL DECKING REFER TO MECHANICAL AND ARCHITECTURAL DRAWINGS. FOR FRAMING INFORMATION, REFER TO DETAILS 1, 2 AND 3 ON DRAWING S0-0-8.

13.) 6" HATCHED AREA INDICATES LOCATION OF CONCRETE SLAB WITH 3" DEEP, 18 GAGE GALVANIZED COMPOSITE STEEL DECK WITH 4" NORMAL WEIGHT CONCRETE TOPPING. TOTAL THICKNESS = 6". REINFORCE WITH 6x6 - W2.1xW2.1 WWR. REFER TO TYPICAL DETAIL 5 ON DRAWING S0.07 FOR ADDITIONAL INFORMATION. USE 3/4" DIA x 5" LONG HEADED STUDS.

14.) ⊗ INDICATES A ROOF DRAIN. REFER TO TYPICAL STRUCTURAL DETAILS 1 AND 2 ON DRAWING S0-0-8 AND DETAIL 1 ON DRAWING S0-0-8. FOR DECKING SUPPORT, REFER TO DETAIL 6 ON DRAWING S0-0-7. REFER TO PLUMBING AND ARCHITECTURAL DRAWINGS FOR OPENING SIZES AND LOCATIONS.

15.) CT INDICATES A COLUMN TERMINATES AT THIS LEVEL.

16.) WF INDICATES A BEND IN THE STEEL BEAM. REFER TO TYPICAL DETAIL 9 ON DRAWING S0-0-7.

17.) OR / OR INDICATES A CMU WALL. REFER TO TYPICAL DETAIL 8 ON DRAWING S0-0-4 FOR REINFORCEMENT, DETAIL 6 ON DRAWING S0-0-5 FOR CONNECTION OF SHEAR WALLS TO BEAMS AND COLUMNS, AND DETAIL 7 ON DRAWING S0-0-5 FOR CONNECTIONS TO STEEL BEAMS AND CONCRETE SLABS AT THE TOP OF WALL FOR NON-STRUCTURAL WALLS. REFER TO RELEVANT SECTIONS FOR CONNECTIONS OF SHEAR WALLS TO THE STRUCTURE.

18.) 8" + 2" PC PLANK INDICATES SPAN OF 8" DEEP PRESTRESSED, PRECAST CONCRETE HOLLOW CORE PLANK WITH A MINIMUM 2" OF NORMAL WEIGHT CONCRETE TOPPING. PLANK AND CONCRETE TOPPING SLAB TO BE DESIGNED TO SUPPORT A MINIMUM LIVE LOAD CAPACITY OF 150 PSF. PRECAST CONCRETE PLANK TO BE DESIGNED FOR MINIMUM OF 2 HOUR FIRE RATING.

19.) 10" + 2" PC PLANK INDICATES SPAN OF 10" DEEP PRESTRESSED, PRECAST CONCRETE HOLLOW CORE PLANK WITH A MINIMUM 2" OF NORMAL WEIGHT CONCRETE TOPPING. PLANK AND CONCRETE TOPPING SLAB TO BE DESIGNED TO SUPPORT A MINIMUM LIVE LOAD CAPACITY OF 150 PSF. PRECAST CONCRETE PLANK TO BE DESIGNED FOR MINIMUM OF 2 HOUR FIRE RATING

20.) FOR DIMENSIONS AND ELEVATIONS NOT GIVEN REFER TO ARCHITECTURAL DRAWINGS.

21.) WF INDICATES A SPLICE CONNECTION ALONG A CONTINUOUS STEEL BEAM. DESIGN SPLICE CONNECTION FOR FULL CAPACITY OF STEEL BEAM.

22.) INDICATES A SLAB DEPRESSION. REFER TO DETAILS 1 ON DRAWING S0-0-6.

23.) 9/16" INDICATES SPAN DIRECTION OF 9/16" DEEP, 20 GAGE GALVANIZED STEEL ROOF DECK.

24.) XX"xXX" INDICATES OPENING IN WEB OF STEEL BEAM FOR MECH/ ELECT/PLUMB/ FIRE PROTECT/ ETC COORDINATE WITH APPLICABLE DRAWING FOR OPENING SIZE. SEE TYPICAL DETAIL 5 AND 6 ON S0-0-6 FOR ADDITIONAL INFORMATION.

25.) 3" INDICATES SPAN DIRECTION OF 3" DEEP, 20 GAGE TYPE N, GALVANIZED STEEL ROOF DECK. SS-S-2 05

COLUMN SCHEDULE *

MARK	SIZE	BASE PLATE SIZE
C1	HSS8x8x3/8	1" x 16" x 1' - 4"
C2	HSS8x8x1/2	1" x 16" x 1' - 4"
C3	HSS12x12x3/8	1" x 20" x 1' - 8"
C4	HSS12x12x1/2	1" x 20" x 1' - 8"
C5	HSS12x12x5/8	1" x 20" x 1' - 8"
C6	HSS12.75x0.500	1" x 20" x 1' - 8"
C7	HSS20x12x1/2	1 1/2" x 20" x 2' - 4"
C8	HSS8x4x3/8	1" x 16" x 1' - 0"
C9	HSS16x0.500	1 1/2" x 24" x 2' - 0"
C10	HSS12x6x1/2	1 1/2" x 20" x 1' - 2"
C11	HSS10x0.500	1" x 18" x 1' - 6"
C12	HSS6x6x3/8	1" x 14" x 1' - 2"
C13	HSS6x4x3/8	1" x 12" x 1' - 2"

* BASE PLATE LENGTH AND WIDTH SPECIFIED IN SCHEDULE IS THE MINIMUM SIZE FOR A COLUMN THAT IS PART OF A BRACED FRAME . SEE FOUNDATION NOTE ABOVE AND REFER TO DETAILS ON DRAWING S4-0-8 AND S4-0-9 FOR ADDITIONAL INFORMATION.

* PROVIDE 4 - 1" DIA F1554-55S1 ANCHOR RODS TYPICALLY. REFER TO DETAILS ON DRAWING S4-0-8 AND S4-0-9 FOR ADDITIONAL ANCHOR RODS FOR COLUMN RECEIVING BRACING.

FOOTING SCHEDULE F SERIES

MARK	SIZE	REINFORCEMENT
F4	4' - 0" x 4' - 0" x 2' - 0"	6 - #5 BOT EA WAY
F5	5' - 0" x 5' - 0" x 2' - 0"	7 - #5 BOT EA WAY
F6	6' - 0" x 6' - 0" x 2' - 6"	8 - #6 BOT EA WAY
F7	7' - 0" x 7' - 0" x 2' - 6"	9 - #6 BOT EA WAY
F8	8' - 0" x 8' - 0" x 3' - 0"	10 - #8 BOT EA WAY
F9	9' - 0" x 9' - 0" x 3' - 0"	11 - #9 BOT EA WAY
F10	10' - 0" x 10' - 0" x 3' - 6"	12 - #9 BOT EA WAY
F11	11' - 0" x 11' - 0" x 3' - 6"	13 - #10 BOT EA WAY
F12	12' - 0" x 12' - 0" x 4' - 0"	14 - #10 BOT EA WAY
FA	SEE PLAN x 2' - 0"	#8 @ 12"OC TOP AND BOT EA WAY

T INDICATES TOP REINFORCING TO MATCH BOTTOM REINFORCING

BRACE FRAME KEY

0" TYP	WF / BF-X	INDICATES A BRACE FRAME ABOVE AND BELOW LEVEL
0" TYP	BF-X / WF	INDICATES A BRACE FRAME ABOVE LEVEL
0" TYP	WF / BF-X	INDICATES A BRACE FRAME BELOW LEVEL

FRAMING ELEVATION NOTES:

1.) TYPICAL UNDERSIDE-OF-DECK ELEVATION = (99' - 6 3/4") AT THE FIRST FLOOR LEVEL. IN THE AREA BOUNDED BY GRIDS (BB) - (MM) AND (22) - (37). UNLESS NOTED OTHERWISE AS (X' - X"), (+/-X' - X"), OR HI/LO.

2.) FRAMING ELEVATIONS ARE BASED ON TOP-OF-FLOOR ELEVATION = (100' - 0"), SHOWN ON THE ARCHITECTURAL DRAWINGS.

3.) COORDINATE ALL ELEVATIONS WITH ARCHITECTURAL DRAWINGS.

4.) SLOPE STEEL UNIFORMLY TO COLUMN ELEVATIONS SHOWN ON PLANS.

FIREPROOFING NOTES:

1. STEEL COLUMNS SHOWN ON THIS DRAWING SHALL RECEIVE 2-HOUR FIRE RATING BY CEMENTITIOUS FIREPROOFING UNLESS INDICATED AS A ROUND HSS COLUMN OR BUILT-UP COLUMN ALONG COLUMN GRID BB.1. EXPOSED TO VIEW PORTION OF ROUND HSS COLUMNS SHALL RECEIVE 2-HOUR FIRE RATING BY INTUMESCENT MASTIC FIREPROOFING. CONCEALED FROM VIEW PORTION OF ROUND HSS COLUMN SHALL RECEIVE 2-HOUR FIRE RATING BY CEMENTITIOUS FIREPROOFING. BUILT-UP COLUMNS ALONG GRID BB.1 SHALL RECEIVE 2-HOUR RATING BY INTUMESCENT MASTIC FIREPROOFING.
2. STEEL BEAMS AND KICKERS SHOWN ON THIS DRAWING, SUPPORTING UPPER LEVEL FLOORS SHALL RECEIVE 2-HOUR RATING BY CEMENTITIOUS FIREPROOFING.
3. CONCEALED FROM VIEW BRACED FRAMES SHALL RECEIVE 2-HOUR FIRE RATING BY CEMENTITIOUS FIREPROOFING .
4. EXPOSED TO VIEW BRACED FRAMES SHALL RECEIVE 2-HOUR FIRE RATING BY INTUMENCENT MASTIC FIREPROOFING.
5. AT STAIRS 3, 5, AND 6, ALL EXPOSED TO VIEW BEAMS AND HSS TUBES SUPPORTING STAIR LANDINGS AND STRINGERS SHALL RECEIVE 2-HOUR RATING BY INTUMESCENT MASTIC FIREPROOFING. NO FIREPROOFING REQUIRED AT SUPPLEMENTAL HSS TUBES SUPPORTING ONLY CURTAINWALL.
6. NO FIREPROOFING REQUIRED AT SUPPLEMENTAL HSS TUBES LOCATED AT THE VOCATIONAL OVERHEAD DOORS.
7. NO FIREPROOFING REQUIRED AT SUPPLEMENTAL HSS TUBES LOCATED AT STOREFRONT, CURTAINWALL, AND FIBERGLASS PANEL HEADS.
8. COORDINATE FIREPROOFING REQUIREMENTS WITH THE SPECIFICATIONS AND ARCHITECTURAL DRAWINGS.

DRA
Drummey Rosane Anderson, Inc.
225 Oakland Road Studio 205 South Windsor, CT 06074
260 Charles Street Studio 300 Waltham, MA 02453
Planning | Architecture | Interior Design
Tel: 617-964-1700
www.draiwa.com

NORTHEAST METRO TECH

100 Hemlock Rd,
Wakefield, MA 01880

EDG
Engineers Design Group Inc.
Structural Engineers
389 Main Street, Suite 401
Malden, MA 02148
(781)396-9007
EDG@EDGINC.COM

REVISION LIST

SS-S-1	4/14/2023	STRUCTURAL STEEL ADDENDUM 1
SS-S-2	4/21/2023	STRUCTURAL STEEL ADDENDUM 2

FOR REFERENCE ONLY
SCOPE OF WORK ON THIS DRAWING IS A PART OF EARLY STRUCTURAL BID PACKAGE

© COPYRIGHT 2021 DRUMMEY ROSANE ANDERSON, INC.

MSBA 90% CD SUBMISSION

MAY 12, 2023

KEY PLAN

PROJECT NORTH | MAGNETIC NORTH

FIRST FLOOR FOUNDATION PLAN - AREA D

Scale: 1/8" = 1'-0"
Job No.: 20202
Drawn By: EDG
Date: MAY 12, 2023

S1-1-1D

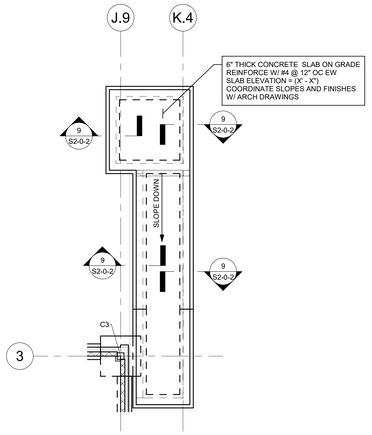

LOADING DOCK PART PLAN

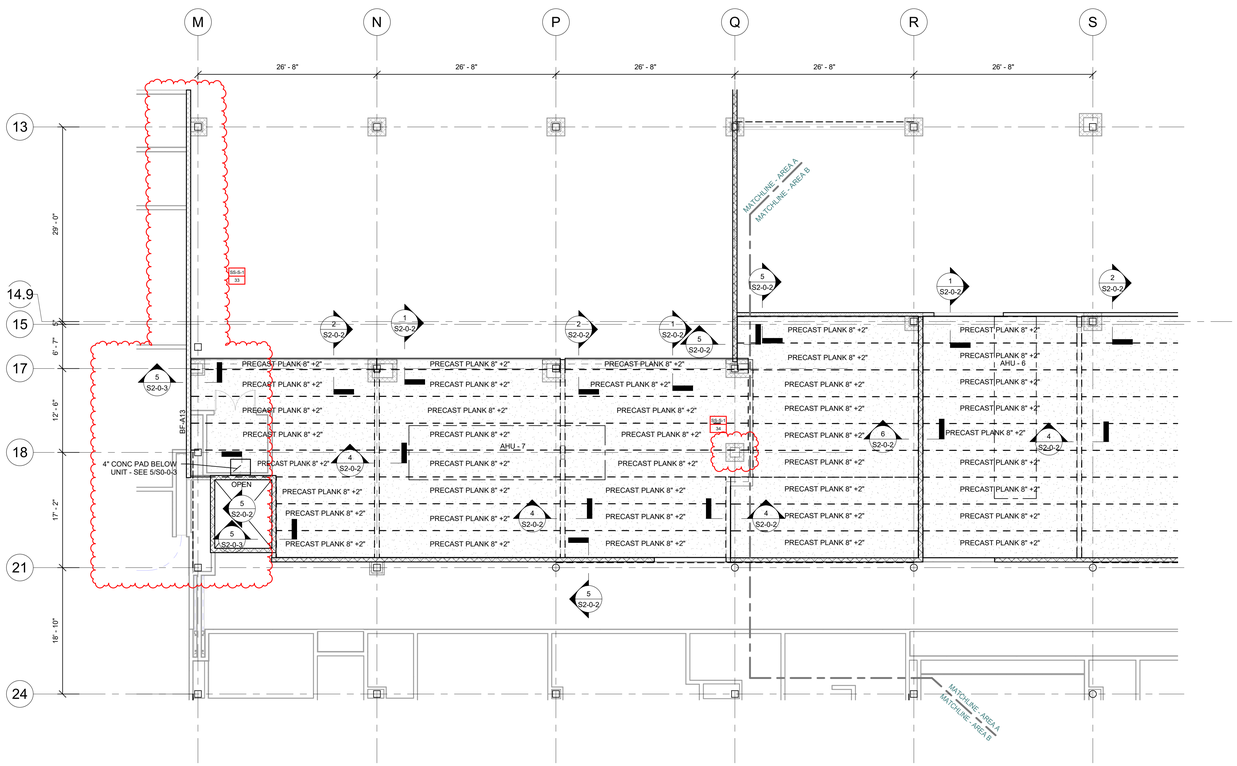

FRAMING ELEVATION NOTES:

1.) TYPICAL TOP-OF-CONCRETE TOPPING ELEVATION = (109'-6") AT THE MEZZANINE FLOOR LEVEL, IN THE AREA BOUNDED BY GRIDS (M) - (Q) AND (17) - (21).

2.) FRAMING ELEVATIONS ARE BASED ON TYPICAL BOTTOM-OF-PLANK ELEVATION = (108' - 8"), SHOWN ON THE ARCHITECTURAL DRAWINGS.

3.) COORDINATE ALL ELEVATIONS WITH ARCHITECTURAL DRAWINGS.

FRAMING NOTES:

1.) FOR GENERAL NOTES AND TYPICAL DETAILS SEE DRAWINGS S0-0-1, S0-0-2, S0-0-3, S0-0-4, S0-0-5 , S0-0-6, S0-0-7 AND S0-0-8.

2.) REFER TO ARCHITECTURAL DRAWINGS FOR ELEVATIONS AND VERTICAL DIMENSIONS. PITCH ALL STEEL UNIFORMLY TO LOW POINTS AT THE COLUMNS AND BENT BEAMS AS SHOWN ON THE ARCHITECTURAL DRAWINGS.

3.) BF-1 ETC... INDICATES A BRACED BAY. REFER TO BRACED FRAME ELEVATIONS AND DETAILS ON DRAWINGS S4-0-1, S4-0-2, S4-0-3, S4-0-4, S4-0-5, S4-0-6, S4-0-7 AND S4-0-8 FOR ADDITIONAL INFORMATION.

4.) [XX] INDICATES THE NUMBER OF 3/4" DIAMETER x 4 1/4" LONG HEADED STUDS WELDED TO THE TOP FLANGE OF THE BEAM. SPACE STUDS EVENLY ALONG THE BEAM UNLESS NOTED OTHERWISE.

5.) INDICATES A MOMENT CONNECTION TO DEVELOP THE FULL CAPACITY OF THE MEMBER. REFER TO TYPICAL DETAILS 7, 8 AND 9 ON DRAWING S0-0-6.

6.) INDICATES A 5/16" FILLET WELD ALL AROUND. (HSS BEAM TO HSS COLUMN) WHERE BEAM DIMENSIONS EXCEED COLUMN DIMENSIONS PROVIDE 1/2" THICK STEEL CAP PLATE TO ACHIEVE ALL AROUND WELD. REFER TO TYPICAL DETAIL 2 ON DRAWING S0-0-7.

7.) < X" > INDICATES UPWARD CAMBER AT THE MID-SPAN OF THE MEMBER.

8.) 5-1/4" INDICATES SPAN DIRECTION OF 2" DEEP, 20 GAGE GALVANIZED COMPOSITE STEEL DECK WITH 3 1/4" LIGHT WEIGHT CONCRETE TOPPING. TOTAL THICKNESS = 5 1/4". REINFORCE WITH 6x6 - W2.1xW2.1 WWR.

9.) 1 1/2" INDICATES SPAN DIRECTION OF 1 1/2" DEEP, 20 GAGE TYPE B, GALVANIZED STEEL ROOF DECK.

10.) 3" NA INDICATES SPAN DIRECTION OF 3" DEEP, 20 GAGE TYPE NA, GALVANIZED ACOUSTIC STEEL ROOF DECK. SS-S-2 08

11.) 4" LW INDICATES SPAN DIRECTION OF 1 1/2" DEEP, 20 GAGE GALVANIZED COMPOSITE STEEL DECK WITH 2 1/2" LIGHT WEIGHT CONCRETE TOPPING. TOTAL THICKNESS = 4". REINFORCE WITH 6x6 - W2.1xW2.1 WWR.

12.) FOR EXACT NUMBER, SIZE, AND LOCATION OF OPENING IN STEEL DECKING REFER TO MECHANICAL AND ARCHITECTURAL DRAWINGS. FOR FRAMING INFORMATION, REFER TO DETAILS 1, 2 AND 3 ON DRAWING S0-0-8.

13.) 6" HATCHED AREA INDICATES LOCATION OF CONCRETE SLAB WITH 3" DEEP, 18 GAGE GALVANIZED COMPOSITE STEEL DECK WITH 4" NORMAL WEIGHT CONCRETE TOPPING. TOTAL THICKNESS = 6". REINFORCE WITH 6x6 - W2.1xW2.1 WWR. REFER TO TYPICAL DETAIL 5 ON DRAWING S0.07 FOR ADDITIONAL INFORMATION. USE 3/4" DIA x 5" LONG HEADED STUDS.

14.) INDICATES A ROOF DRAIN. REFER TO TYPICAL STRUCTURAL DETAILS 1 AND 2 ON DRAWING S0-0-8 AND DETAIL 1 ON DRAWING S0-0-8. FOR DECKING SUPPORT, REFER TO DETAIL 6 ON DRAWING S0-0-7. REFER TO PLUMBING AND ARCHITECTURAL DRAWINGS FOR OPENING SIZES AND LOCATIONS.

15.) CT INDICATES A COLUMN TERMINATES AT THIS LEVEL.

16.) WF INDICATES A BEND IN THE STEEL BEAM. REFER TO TYPICAL DETAIL 9 ON DRAWING S0-0-7.

17.) OR OR INDICATES A CMU WALL. REFER TO TYPICAL DETAIL 8 ON DRAWING S0-0-4 FOR REINFORCEMENT, DETAIL 6 ON DRAWING S0-0-5 FOR CONNECTION OF SHEAR WALLS TO BEAMS AND COLUMNS, AND DETAIL 7 ON DRAWING S0-0-5 FOR CONNECTIONS TO STEEL BEAMS AND CONCRETE SLABS AT THE TOP OF WALL FOR NON-STRUCTURAL WALLS. REFER TO RELEVANT SECTIONS FOR CONNECTIONS OF SHEAR WALLS TO THE STRUCTURE.

18.) 8" + 2" PC PLANK INDICATES SPAN OF 8" DEEP PRESTRESSED, PRECAST CONCRETE HOLLOW CORE PLANK WITH A MINIMUM 2" OF NORMAL WEIGHT CONCRETE TOPPING. PLANK AND CONCRETE TOPPING SLAB TO BE DESIGNED TO SUPPORT A MINIMUM LIVE LOAD CAPACITY OF 150 PSF. PRECAST CONCRETE PLANK TO BE DESIGNED FOR MINIMUM OF 2 HOUR FIRE RATING.

19.) 10" + 2" PC PLANK INDICATES SPAN OF 10" DEEP PRESTRESSED, PRECAST CONCRETE HOLLOW CORE PLANK WITH A MINIMUM 2" OF NORMAL WEIGHT CONCRETE TOPPING. PLANK AND CONCRETE TOPPING SLAB TO BE DESIGNED TO SUPPORT A MINIMUM LIVE LOAD CAPACITY OF 150 PSF. PRECAST CONCRETE PLANK TO BE DESIGNED FOR MINIMUM OF 2 HOUR FIRE RATING

20.) FOR DIMENSIONS AND ELEVATIONS NOT GIVEN REFER TO ARCHITECTURAL DRAWINGS.

21.) WF INDICATES A SPLICE CONNECTION ALONG A CONTINUOUS STEEL BEAM. DESIGN SPLICE CONNECTION FOR FULL CAPACITY OF STEEL BEAM.

22.) INDICATES A SLAB DEPRESSION. REFER TO DETAILS 1 ON DRAWING S0-0-6.

23.) 9/16" INDICATES SPAN DIRECTION OF 9/16" DEEP, 20 GAGE GALVANIZED STEEL ROOF DECK.

24.) XX"XXX" INDICATES OPENING IN WEB OF STEEL BEAM FOR MECH/ ELECT/PLUMB/ FIRE PROTECT/ ETC COORDINATE WITH APPLICABLE DRAWING FOR OPENING SIZE. SEE TYPICAL DETAIL 5 AND 6 ON S0-0-6 FOR ADDITIONAL INFORMATION.

25.) 3" INDICATES SPAN DIRECTION OF 3" DEEP, 20 GAGE TYPE N, GALVANIZED STEEL ROOF DECK. SS-S-2 07

FIREPROOFING NOTES:

1. STEEL COLUMNS, SHOWN ON THIS DRAWING, SHALL RECEIVE 2-HOUR FIRE RATING BY CEMENTITIOUS FIREPROOFING UNLESS INDICATED AS A ROUND HSS COLUMN. EXPOSED TO VIEW PORTION OF ROUND HSS COLUMNS SHALL RECEIVE 2-HOUR FIRE RATING BY INTUMESCENT MASTIC FIREPROOFING. CONCEALED FROM VIEW PORTION OF ROUND HSS COLUMN SHALL RECEIVE SHALL RECEIVE 2-HOUR FIRE RATING BY CEMENTITIOUS FIREPROOFING.

2. EXPOSED TO VIEW BRACED FRAMES SHOWN ON THIS DRAWING, SHALL RECEIVE 2-HOUR RATING BY INTUMESCENT MASTIC FIREPROOFING.

3. COORDINATE FIREPROOFING REQUIREMENTS WITH THE SPECIFICATIONS AND ARCHITECTURAL DRAWINGS.

DRA
Drummey Rosane Anderson, Inc.
225 Oakland Road
Studio 205
South Windsor, CT
06074
260 Charles Street
Studio 300
Waltham, MA
02453
Planning | Architecture | Interior Design
Tel: 617-964-1700
www.draiwa.com

NORTHEAST METRO TECH

100 Hemlock Rd,
Wakefield, MA 01880

EDG
Engineers Design Group Inc.
Structural Engineers
389 Main Street, Suite 401
Malden, MA 02148
(781)396-9007
EDG@EDGINC.COM

REVISION LIST

SS-S-1	4/14/2023	STRUCTURAL STEEL ADDENDUM 1
SS-S-2	4/21/2023	STRUCTURAL STEEL ADDENDUM 2

FOR REFERENCE ONLY
SCOPE OF WORK ON THIS DRAWING IS A PART OF EARLY STRUCTURAL BID PACKAGE

© COPYRIGHT 2021 DRUMMEY ROSANE ANDERSON, INC.

MSBA 90% CD SUBMISSION

MAY 12, 2023

KEY PLAN

PROJECT NORTH | MAGNETIC NORTH

MEZZANINE FLOOR FRAMING - AREA A

Scale: 1/8" = 1'-0"
Job No.: 20202
Drawn By: EDG
Date: MAY 12, 2023

S1-1-1MA

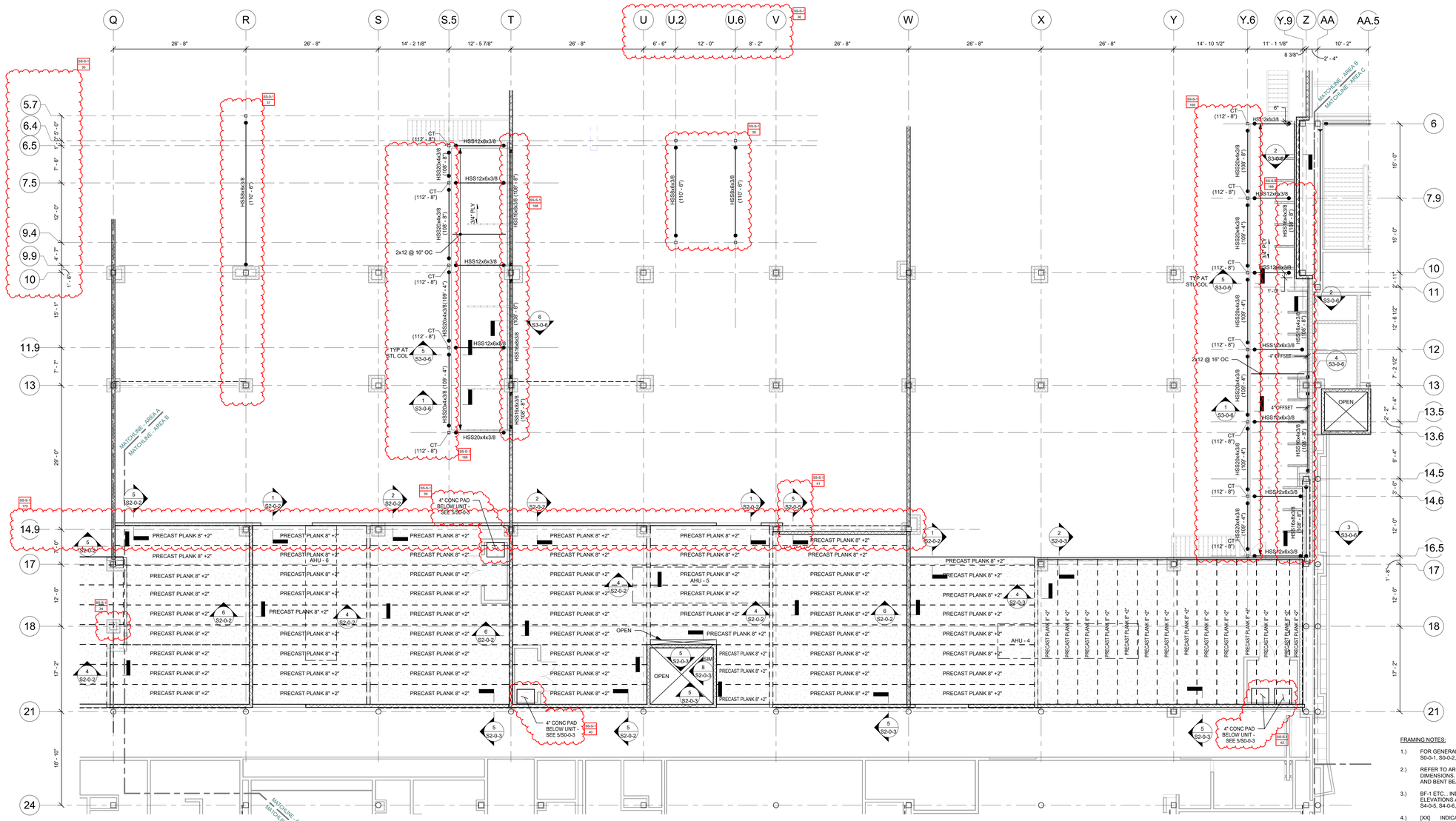

FRAMING ELEVATION NOTES:

1.) TYPICAL TOP-OF-CONCRETE TOPPING ELEVATION = (109' - 6") AT THE MEZZANINE FLOOR LEVEL, IN THE AREA BOUNDED BY GRIDS (Q) - (Z) AND (15) - (21).

2.) TYPICAL TOP-OF-STEEL ELEVATION = (108' - 9") AT THE MEZZANINE FLOOR LEVEL, IN THE AREA BOUNDED BY GRIDS (S.5) - (U.6) AND (6) - (13.6), UNLESS NOTED OTHERWISE AS (X'-X"), (+/-X'-X"), OR H/LO. SS-S-1 171

3.) TYPICAL TOP-OF-STEEL ELEVATION = (108' - 9") AT THE MEZZANINE FLOOR LEVEL, IN THE AREA BOUNDED BY GRIDS (Y.6) - (Z) AND (6) - (16.5), UNLESS NOTED OTHERWISE AS (X'-X"), (+/-X'-X"), OR H/LO.

4.) FRAMING ELEVATIONS ARE BASED ON TYPICAL BOTTOM-OF-PLANK ELEVATION = (108' - 8"), SHOWN ON THE ARCHITECTURAL DRAWINGS.

5.) COORDINATE ALL ELEVATIONS WITH ARCHITECTURAL DRAWINGS.

FIREPROOFING NOTES:

1. STEEL COLUMNS, SHOWN ON THIS DRAWING, SHALL RECEIVE 2-HOUR FIRE RATING BY CEMENTITIOUS FIREPROOFING UNLESS INDICATED AS A ROUND HSS COLUMN. EXPOSED TO VIEW PORTION OF ROUND HSS COLUMNS SHALL RECEIVE 2-HOUR FIRE RATING BY INTUMESCENT MASTIC FIREPROOFING. CONCEALED FROM VIEW PORTION OF ROUND HSS COLUMN SHALL RECEIVE 2-HOUR FIRE RATING BY CEMENTITIOUS FIREPROOFING.

2. STEEL COLUMNS, HSS BEAMS, AND ANGLES SUPPORTING THE PLYWOOD MEZZANINES BETWEEN COLUMN GRIDS S.5 AND T AND GRIDS Y.6 AND Z SHALL RECEIVE 2-HOUR FIRE RATING BY INTUMESCENT MASTIC FIREPROOFING.

3. EXPOSED TO VIEW BRACED FRAMES SHOWN ON THIS DRAWING, SHALL RECEIVE 2-HOUR RATING BY INTUMESCENT MASTIC FIREPROOFING.

4. NO FIREPROOFING REQUIRED AT COLUMNS AT GRIDS Y.10-6.5, Y.11-6.5, Y.10-9.2, AND Y.11-9.2 OR AT THE HSSTUBES FRAMING INTO THEM.

5. COORDINATE FIREPROOFING REQUIREMENTS WITH THE SPECIFICATIONS AND ARCHITECTURAL DRAWINGS.

FRAMING NOTES:

1.) FOR GENERAL NOTES AND TYPICAL DETAILS SEE DRAWINGS S0-0-1, S0-0-2, S0-0-3, S0-0-4, S0-0-5 , S0-0-6, S0-0-7 AND S0-0-8.

2.) REFER TO ARCHITECTURAL DRAWINGS FOR ELEVATIONS AND VERTICAL DIMENSIONS. PITCH ALL STEEL UNIFORMLY TO LOW POINTS AT THE COLUMNS AND BENT BEAMS AS SHOWN ON THE ARCHITECTURAL DRAWINGS.

3.) BF-1 ETC... INDICATES A BRACED BAY. REFER TO BRACED FRAME ELEVATIONS AND DETAILS ON DRAWINGS S4-0-1, S4-0-2, S4-0-3, S4-0-4, S4-0-5, S4-0-6, S4-0-7 AND S4-0-8 FOR ADDITIONAL INFORMATION.

4.) [XX] INDICATES THE NUMBER OF 3/4" DIAMETER x 4 1/4" LONG HEADED STUDS WELDED TO THE TOP FLANGE OF THE BEAM. SPACE STUDS EVENLY ALONG THE BEAM UNLESS NOTED OTHERWISE.

5.) INDICATES A MOMENT CONNECTION TO DEVELOP THE FULL CAPACITY OF THE MEMBER. REFER TO TYPICAL DETAILS 7, 8 AND 9 ON DRAWING S0-0-6.

6.) INDICATES A 5/16" FILLET WELD ALL AROUND. (HSS BEAM TO HSS COLUMN) WHERE BEAM DIMENSIONS EXCEED COLUMN DIMENSIONS PROVIDE 1/2" THICK STEEL CAP PLATE TO ACHIEVE ALL AROUND WELD. REFER TO TYPICAL DETAIL 2 ON DRAWING S0-0-7.

7.) < X" > INDICATES UPWARD CAMBER AT THE MID-SPAN OF THE MEMBER.

8.) 5-1/4" INDICATES SPAN DIRECTION OF 2" DEEP, 20 GAGE GALVANIZED COMPOSITE STEEL DECK WITH 3 1/4" LIGHT WEIGHT CONCRETE TOPPING. TOTAL THICKNESS = 5 1/4". REINFORCE WITH 6x6 - W2.1xW2.1 WWR.

9.) 1 1/2" INDICATES SPAN DIRECTION OF 1 1/2" DEEP, 20 GAGE ~~TYPE B GALVANIZED STEEL ROOF DECK.~~

10.) 3" NA INDICATES SPAN DIRECTION OF 3" DEEP, 20 GAGE TYPE NA, GALVANIZED ACOUSTIC STEEL ROOF DECK. SS-S-2 08

11.) 4" LW INDICATES SPAN DIRECTION OF 1 1/2" DEEP, 20 GAGE GALVANIZED COMPOSITE STEEL DECK WITH 2 1/2" LIGHT WEIGHT CONCRETE TOPPING. TOTAL THICKNESS = 4". REINFORCE WITH 6x6 - W2.1xW2.1 WWR.

12.) FOR EXACT NUMBER, SIZE, AND LOCATION OF OPENING IN STEEL DECKING REFER TO MECHANICAL AND ARCHITECTURAL DRAWINGS. FOR FRAMING INFORMATION, REFER TO DETAILS 1, 2 AND 3 ON DRAWING S0-0-8.

13.) 6" HATCHED AREA INDICATES LOCATION OF CONCRETE SLAB WITH 3" DEEP, 18 GAGE GALVANIZED COMPOSITE STEEL DECK WITH 4" NORMAL WEIGHT CONCRETE TOPPING. TOTAL THICKNESS = 6". REINFORCE WITH 6x6 - W2.1xW2.1 WWR. REFER TO TYPICAL DETAIL 5 ON DRAWING S0.07 FOR ADDITIONAL INFORMATION. USE 3/4" DIA x 5" LONG HEADED STUDS.

14.) INDICATES A ROOF DRAIN. REFER TO TYPICAL STRUCTURAL DETAILS 1 AND 2 ON DRAWING S0-0-8 AND DETAIL 1 ON DRAWING S0-0-8. FOR DECKING SUPPORT, REFER TO DETAIL 6 ON DRAWING S0-0-7. REFER TO PLUMBING AND ARCHITECTURAL DRAWINGS FOR OPENING SIZES AND LOCATIONS.

15.) CT INDICATES A COLUMN TERMINATES AT THIS LEVEL.

16.) WF INDICATES A BEND IN THE STEEL BEAM. REFER TO TYPICAL DETAIL 9 ON DRAWING S0-0-7.

17.) INDICATES A CMU WALL. REFER TO TYPICAL DETAIL 8 ON DRAWING S0-0-4 FOR REINFORCEMENT. DETAIL 6 ON DRAWING S0-0-5 FOR CONNECTION OF SHEAR WALLS TO BEAMS AND COLUMNS, AND DETAIL 7 ON DRAWING S0-0-5 FOR CONNECTIONS TO STEEL BEAMS AND CONCRETE SLABS AT THE TOP OF WALL FOR NON-STRUCTURAL WALLS. REFER TO RELEVANT SECTIONS FOR CONNECTIONS OF SHEAR WALLS TO THE STRUCTURE.

18.) 8" + 2" PC PLANK INDICATES SPAN OF 8" DEEP PRESTRESSED, PRECAST CONCRETE HOLLOW CORE PLANK WITH A MINIMUM 2" OF NORMAL WEIGHT CONCRETE TOPPING. PLANK AND CONCRETE TOPPING SLAB TO BE DESIGNED TO SUPPORT A MINIMUM LIVE LOAD CAPACITY OF 150 PSF. PRECAST CONCRETE PLANK TO BE DESIGNED FOR MINIMUM OF 2 HOUR FIRE RATING.

19.) 10" + 2" PC PLANK INDICATES SPAN OF 10" DEEP PRESTRESSED, PRECAST CONCRETE HOLLOW CORE PLANK WITH A MINIMUM 2" OF NORMAL WEIGHT CONCRETE TOPPING. PLANK AND CONCRETE TOPPING SLAB TO BE DESIGNED TO SUPPORT A MINIMUM LIVE LOAD CAPACITY OF 150 PSF. PRECAST CONCRETE PLANK TO BE DESIGNED FOR MINIMUM OF 2 HOUR FIRE RATING

20.) FOR DIMENSIONS AND ELEVATIONS NOT GIVEN REFER TO ARCHITECTURAL DRAWINGS.

21.) WF INDICATES A SPLICE CONNECTION ALONG A CONTINUOUS STEEL BEAM. DESIGN SPLICE CONNECTION FOR FULL CAPACITY OF STEEL BEAM.

22.) INDICATES A SLAB DEPRESSION. REFER TO DETAILS 1 ON DRAWING S0-0-6.

23.) 9/16" INDICATES SPAN DIRECTION OF 9/16" DEEP, 20 GAGE GALVANIZED STEEL ROOF DECK.

24.) XX"xXX" INDICATES OPENING IN WEB OF STEEL BEAM FOR MECH/ ELECT/PLUMB/ FIRE PROTECT/ ETC COORDINATE WITH APPLICABLE DRAWING FOR OPENING SIZE. SEE TYPICAL DETAIL 5 AND 6 ON S0-0-8. FOR ADDITIONAL INFORMATION.

25.) 3" INDICATES SPAN DIRECTION OF 3" DEEP, 20 GAGE TYPE N, GALVANIZED STEEL ROOF DECK. SS-S-2 09

DRA

Drummey Rosane Anderson, Inc.

225 Oakland Road
Studio 205
South Windsor, CT
06074

260 Charles Street
Studio 300
Waltham, MA
02453

Planning | Architecture | Interior Design

Tel: 617.964.1700
www.draiwa.com

NORTHEAST METRO TECH

100 Hemlock Rd,
Wakefield, MA 01880

EDG
Engineers Design Group Inc.
Structural Engineers
389 Main Street, Suite 401
Malden, MA 02148
(781)396-9007
EDG@EDGINC.COM

REVISION LIST

SS-S-1	4/14/2023	STRUCTURAL STEEL ADDENDUM 1
SS-S-2	4/21/2023	STRUCTURAL STEEL ADDENDUM 2

FOR REFERENCE ONLY
SCOPE OF WORK ON THIS DRAWING IS A PART OF EARLY STRUCTURAL BID PACKAGE

© COPYRIGHT 2021 DRUMMEY ROSANE ANDERSON, INC.

MSBA 90% CD SUBMISSION

MAY 12, 2023

KEY PLAN

PROJECT NORTH

MAGNETIC NORTH

MEZZANINE FLOOR FRAMING- AREA B

Scale: 1/8" = 1'-0"
Job No.: 20202
Drawn By: EDG
Date: MAY 12, 2023

S1-1-1MB

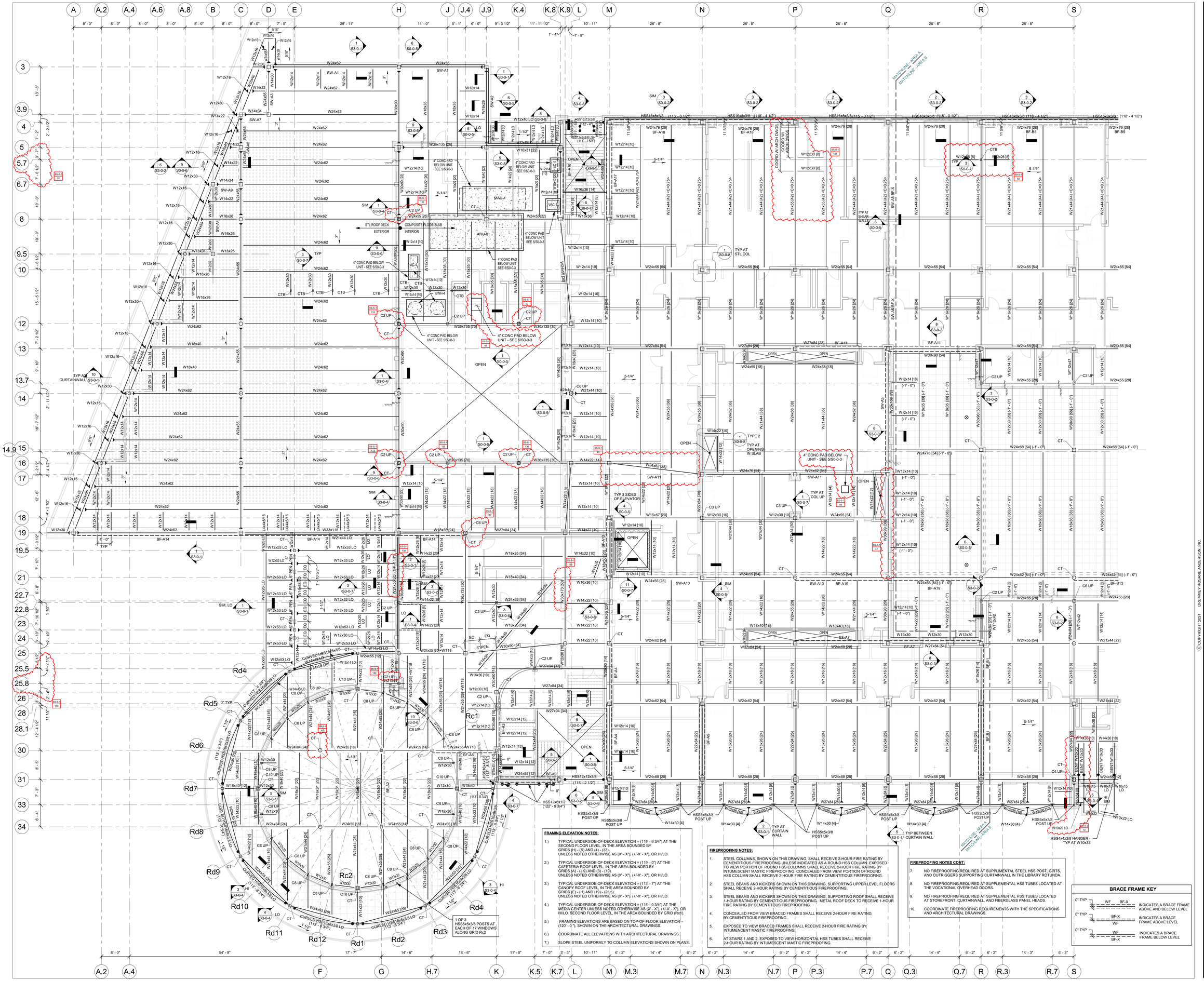

FRAMING ELEVATION NOTES:

1.) TYPICAL UNDERSIDE-OF-DECK ELEVATION = (119' - 6 3/4") AT THE SECOND FLOOR LEVEL, IN THE AREA BOUNDED BY GRIDS (H) - (S) AND (4) - (33). UNLESS NOTED OTHERWISE AS (X' - X"), (+/-X' - X"), OR HI/LO.

2.) TYPICAL UNDERSIDE-OF-DECK ELEVATION = (119' - 0") AT THE CAFETERIA ROOF LEVEL, IN THE AREA BOUNDED BY GRIDS (A) - (J.9) AND (3) - (15). UNLESS NOTED OTHERWISE AS (X' - X"), (+/-X' - X"), OR HI/LO.

3.) TYPICAL UNDERSIDE-OF-DECK ELEVATION = (113' - 7") AT THE CANOPY ROOF LEVEL, IN THE AREA BOUNDED BY GRIDS (E) - (H) AND (19) - (25.5). UNLESS NOTED OTHERWISE AS (X' - X"), (+/-X' - X"), OR HI/LO.

4.) TYPICAL UNDERSIDE-OF-DECK ELEVATION = (118' - 0 3/4") AT THE MEDIA CENTER UNLESS NOTED OTHERWISE AS (X' - X"), (+/-X' - X"), OR HI/LO. SECOND FLOOR LEVEL, IN THE AREA BOUNDED BY GRID (Rc1).

5.) FRAMING ELEVATIONS ARE BASED ON TOP-OF-FLOOR ELEVATION = (120' - 0 "), SHOWN ON THE ARCHITECTURAL DRAWINGS.

6.) COORDINATE ALL ELEVATIONS WITH ARCHITECTURAL DRAWINGS.

7.) SLOPE:STEEL UNIFORMLY TO COLUMN ELEVATIONS SHOWN ON PLANS.

FIREPROOFING NOTES:

1. STEEL COLUMNS, SHOWN ON THIS DRAWING, SHALL RECEIVE 2-HOUR FIRE RATING BY CEMENTITIOUS FIREPROOFING UNLESS INDICATED AS A ROUND HSS COLUMN. EXPOSED TO VIEW PORTION OF ROUND HSS COLUMNS SHALL RECEIVE 2-HOUR FIRE RATING BY INTUMESCENT MASTIC FIREPROOFING. CONCEALED FROM VIEW PORTION OF ROUND HSS COLUMN SHALL RECEIVE 2-HOUR FIRE RATING BY CEMENTITIOUS FIREPROOFING.
2. STEEL BEAMS AND KICKERS SHOWN ON THIS DRAWING, SUPPORTING UPPER LEVEL FLOORS SHALL RECEIVE 2-HOUR RATING BY CEMENTITIOUS FIREPROOFING.
3. STEEL BEAMS AND KICKERS SHOWN ON THIS DRAWING, SUPPORTING ROOF SHALL RECEIVE 1-HOUR RATING BY CEMENTITIOUS FIREPROOFING. METAL ROOF DECK TO RECEIVE 1-HOUR FIRE RATING BY CEMENTITOUS FIREPROOFING.
4. CONCEALED FROM VIEW BRACED FRAMES SHALL RECEIVE 2-HOUR FIRE RATING BY CEMENTITIOUS FIREPROOFING .
5. EXPOSED TO VIEW BRACED FRAMES SHALL RECEIVE 2-HOUR FIRE RATING BY INTUMESCENT MASTIC FIREPROOFING.
6. AT STAIRS 1 AND 2, EXPOSED TO VIEW HORIZONTAL HSS TUBES SHALL RECEIVE 2-HOUR RATING BY INTUMESCENT MASTIC FIREPROOFING.

FIREPROOFING NOTES CONT:

7. NO FIREPROOFING REQUIRED AT SUPPLIMENTAL STEEL HSS POST, GIRTS, AND OUTRIGGERS SUPPORTING CURTAINWALL IN THE LIBRARY ROTUNDA.
8. NO FIREPROOFING REQUIRED AT SUPPLEMENTAL HSS TUBES LOCATED AT THE VOCATIONAL OVERHEAD DOORS.
9. NO FIREPROOFING REQUIRED AT SUPPLEMENTAL HSS TUBES LOCATED AT STOREFRONT, CURTAINWALL, AND FIBERGLASS PANEL HEADS.
10. COORDINATE FIREPROOFING REQUIREMENTS WITH THE SPECIFICATIONS AND ARCHITECTURAL DRAWINGS.

BRACE FRAME KEY

0" TYP	WF / BF-X	INDICATES A BRACE FRAME ABOVE AND BELOW LEVEL
0" TYP	BF-X / WF	INDICATES A BRACE FRAME ABOVE LEVEL
0" TYP	WF / BF-X	INDICATES A BRACE FRAME BELOW LEVEL

DRA
Drummey Rosane Anderson, Inc.
225 Oakland Road
Studio 205
South Windsor, CT
06074
260 Charles Street
Studio 300
Waltham, MA
02453
Planning | Architecture | Interior Design
Tel: 617.964.1700
www.draiwa.com

NORTHEAST METRO TECH

100 Hemlock Rd,
Wakefield, MA 01880

EDG
Engineers Design Group Inc.
Structural Engineers
389 Main Street, Suite 401
Malden, MA 02148
(781)396-9007
EDG@EDGINC.COM

REVISION LIST

SS-S-1	4/14/2023	STRUCTURAL STEEL ADDENDUM 1
SS-S-2	4/21/2023	STRUCTURAL STEEL ADDENDUM 2

FOR REFERENCE ONLY
SCOPE OF WORK ON THIS DRAWING IS A PART OF EARLY STRUCTURAL BID PACKAGE

© COPYRIGHT 2021 DRUMMEY ROSANE ANDERSON, INC.

MSBA 90% CD SUBMISSION

MAY 12, 2023

KEY PLAN

A B C D

PROJECT NORTH

MAGNETIC NORTH

SECOND FLOOR FRAMING PLAN - AREA A

Scale: 1/8" = 1'-0"
Job No.: 20202
Drawn By: EDG
Date: MAY 12, 2023

S1-1-2A

FIREPROOFING NOTES:

1. STEEL COLUMNS, SHOWN ON THIS DRAWING, SHALL RECEIVE 2-HOUR FIRE RATING BY CEMENTITIOUS FIREPROOFING UNLESS INDICATED AS A ROUND HSS COLUMN. EXPOSED TO VIEW PORTION OF ROUND HSS COLUMNS SHALL RECEIVE 2-HOUR FIRE RATING BY INTUMESCENT MASTIC FIREPROOFING. CONCEALED FROM VIEW PORTION OF ROUND HSS COLUMN SHALL RECEIVE 2-HOUR FIRE RATING BY CEMENTITIOUS FIREPROOFING.
2. STEEL BEAMS AND KICKERS SHOWN ON THIS DRAWING, SUPPORTING UPPER LEVEL FLOORS SHALL RECEIVE 2-HOUR RATING BY CEMENTITIOUS FIREPROOFING.
3. STEEL BEAMS AND KICKERS SHOWN ON THIS DRAWING, SUPPORTING ROOF SHALL RECEIVE 1-HOUR RATING BY CEMENTITIOUS FIREPROOFING. METAL ROOF DECK TO RECEIVE 1-HOUR FIRE RATING BY CEMENTITIOUS FIREPROOFING.
4. CONCEALED FROM VIEW BRACED FRAMES SHALL RECEIVE 2-HOUR FIRE RATING BY CEMENTITIOUS FIREPROOFING .
5. EXPOSED TO VIEW BRACED FRAMES SHALL RECEIVE 2-HOUR FIRE RATING BY INTUMENCENT MASTIC FIREPROOFING.
6. NO FIREPROOFING REQUIRED AT SUPPLEMENTAL HSS TUBES LOCATED AT THE VOCATIONAL OVERHEAD DOORS.
7. NO FIREPROOFING REQUIRED AT SUPPLEMENTAL HSS TUBES LOCATED AT STOREFRONT, CURTAINWALL, AND FIBERGLASS PANEL HEADS.
8. COORDINATE FIREPROOFING REQUIREMENTS WITH THE SPECIFICATIONS AND ARCHITECTURAL DRAWINGS.

FRAMING NOTES:

1.) FOR GENERAL NOTES AND TYPICAL DETAILS SEE DRAWINGS S0-0-1, S0-0-2, S0-0-3, S0-0-4, S0-0-5 , S0-0-6, S0-0-7 AND S0-0-8.

2.) REFER TO ARCHITECTURAL DRAWINGS FOR ELEVATIONS AND VERTICAL DIMENSIONS. PITCH ALL STEEL UNIFORMLY TO LOW POINTS AT THE COLUMNS AND BENT BEAMS AS SHOWN ON THE ARCHITECTURAL DRAWINGS.

3.) BF-1 ETC... INDICATES A BRACED BAY. REFER TO BRACED FRAME ELEVATIONS AND DETAILS ON DRAWINGS S4-0-1, S4-0-2, S4-0-3, S4-0-4, S4-0-5, S4-0-6, S4-0-7 AND S4-0-8 FOR ADDITIONAL INFORMATION.

4.) [XX] INDICATES THE NUMBER OF 3/4" DIAMETER x 4 1/4" LONG HEADED STUDS WELDED TO THE TOP FLANGE OF THE BEAM. SPACE STUDS EVENLY ALONG THE BEAM UNLESS NOTED OTHERWISE.

5.) INDICATES A MOMENT CONNECTION TO DEVELOP THE FULL CAPACITY OF THE MEMBER. REFER TO TYPICAL DETAILS 7, 8 AND 9 ON DRAWING S0-0-6.

6.) INDICATES A 5/16" FILLET WELD ALL AROUND. (HSS BEAM TO HSS COLUMN) WHERE BEAM DIMENSIONS EXCEED COLUMN DIMENSIONS PROVIDE 1/2" THICK STEEL CAP PLATE TO ACHIEVE ALL AROUND WELD. REFER TO TYPICAL DETAIL 2 ON DRAWING S0-0-7.

7.) < X" > INDICATES UPWARD CAMBER AT THE MID-SPAN OF THE MEMBER.

8.) 5-1/4" INDICATES SPAN DIRECTION OF 2" DEEP, 20 GAGE GALVANIZED COMPOSITE STEEL DECK WITH 3 1/4" LIGHT WEIGHT CONCRETE TOPPING. TOTAL THICKNESS = 5 1/4". REINFORCE WITH 6x6 - W2.1xW2.1 WWR.

9.) 1 1/2" INDICATES SPAN DIRECTION OF 1 1/2" DEEP, 20 GAGE TYPE N, GALVANIZED STEEL ROOF DECK.

10.) 3" NA INDICATES SPAN DIRECTION OF 3" DEEP, 20 GAGE TYPE NA, GALVANIZED ACOUSTIC STEEL ROOF DECK. SS-S-2 43

11.) 4" LW INDICATES SPAN DIRECTION OF 1 1/2" DEEP, 20 GAGE GALVANIZED COMPOSITE STEEL DECK WITH 2 1/2" LIGHT WEIGHT CONCRETE TOPPING. TOTAL THICKNESS = 4". REINFORCE WITH 6x6 - W2.1xW2.1 WWR.

12.) FOR EXACT NUMBER, SIZE, AND LOCATION OF OPENING IN STEEL DECKING REFER TO MECHANICAL AND ARCHITECTURAL DRAWINGS. FOR FRAMING INFORMATION, REFER TO DETAILS 1, 2 AND 3 ON DRAWING S0-0-8.

13.) 6" HATCHED AREA INDICATES LOCATION OF CONCRETE SLAB WITH 3" DEEP, 18 GAGE GALVANIZED COMPOSITE STEEL DECK WITH 4" NORMAL WEIGHT CONCRETE TOPPING. TOTAL THICKNESS = 6". REINFORCE WITH 6x6 - W2.1xW2.1 WWR. REFER TO TYPICAL DETAIL 5 ON DRAWING S0.07 FOR ADDITIONAL INFORMATION. USE 3/4" DIA x 5" LONG HEADED STUDS.

14.) INDICATES A ROOF DRAIN. REFER TO TYPICAL STRUCTURAL DETAILS 1 AND 2 ON DRAWING S0-0-8 AND DETAIL 1 ON DRAWING S0-0-8. FOR DECKING SUPPORT, REFER TO DETAIL 6 ON DRAWING S0-0-7. REFER TO PLUMBING AND ARCHITECTURAL DRAWINGS FOR OPENING SIZES AND LOCATIONS.

15.) CT INDICATES A COLUMN TERMINATES AT THIS LEVEL.

16.) WF INDICATES A BEND IN THE STEEL BEAM. REFER TO TYPICAL DETAIL 9 ON DRAWING S0-0-7.

17.) OR / OR INDICATES A CMU WALL. REFER TO TYPICAL DETAIL 8 ON DRAWING S0-0-4 FOR REINFORCEMENT, DETAIL 6 ON DRAWING S0-0-5 FOR CONNECTION OF SHEAR WALLS TO BEAMS AND COLUMNS, AND DETAIL 7 ON DRAWING S0-0-5 FOR CONNECTIONS TO STEEL BEAMS AND CONCRETE SLABS AT THE TOP OF WALL FOR NON-STRUCTURAL WALLS. REFER TO RELEVANT SECTIONS FOR CONNECTIONS OF SHEAR WALLS TO THE STRUCTURE.

18.) 8" + 2" PC PLANK INDICATES SPAN OF 8" DEEP PRESTRESSED, PRECAST CONCRETE HOLLOW CORE PLANK WITH A MINIMUM 2" OF NORMAL WEIGHT CONCRETE TOPPING. PLANK AND CONCRETE TOPPING SLAB TO BE DESIGNED TO SUPPORT A MINIMUM LIVE LOAD CAPACITY OF 150 PSF. PRECAST CONCRETE PLANK TO BE DESIGNED FOR MINIMUM OF 2 HOUR FIRE RATING.

19.) 10" + 2" PC PLANK INDICATES SPAN OF 10" DEEP PRESTRESSED, PRECAST CONCRETE HOLLOW CORE PLANK WITH A MINIMUM 2" OF NORMAL WEIGHT CONCRETE TOPPING. PLANK AND CONCRETE TOPPING SLAB TO BE DESIGNED TO SUPPORT A MINIMUM LIVE LOAD CAPACITY OF 150 PSF. PRECAST CONCRETE PLANK TO BE DESIGNED FOR MINIMUM OF 2 HOUR FIRE RATING

20.) FOR DIMENSIONS AND ELEVATIONS NOT GIVEN REFER TO ARCHITECTURAL DRAWINGS.

21.) WF INDICATES A SPLICE CONNECTION ALONG A CONTINUOUS STEEL BEAM. DESIGN SPLICE CONNECTION FOR FULL CAPACITY OF STEEL BEAM.

22.) INDICATES A SLAB DEPRESSION. REFER TO DETAILS 1 ON DRAWING S0-0-6.

23.) 9/16" INDICATES SPAN DIRECTION OF 9/16" DEEP, 20 GAGE GALVANIZED STEEL ROOF DECK.

24.) XX"xXX" INDICATES OPENING IN WEB OF STEEL BEAM FOR MECH/ ELECT/PLUMB/ FIRE PROTECT/ ETC COORDINATE WITH APPLICABLE DRAWING FOR OPENING SIZE. SEE TYPICAL DETAIL 5 AND 6 ON SO-0-6. FOR ADDITIONAL INFORMATION.

25.) 3" INDICATES SPAN DIRECTION OF 3" DEEP, 20 GAGE TYPE N, GALVANIZED STEEL ROOF DECK. SS-S-2 11

FRAMING ELEVATION NOTES:

1.) TYPICAL UNDERSIDE-OF-DECK ELEVATION = (119' - 6 3/4") AT THE SECOND FLOOR LEVEL, IN THE AREA BOUNDED BY GRIDS (Q) - (Z) AND (4) - (33). UNLESS NOTED OTHERWISE AS (X' - X"), (+/-X' - X"), OR HILO.

2.) TYPICAL UNDERSIDE-OF-DECK ELEVATION = (119' - 6 3/4") AT THE LOW ROOF LEVEL, IN THE AREA BOUNDED BY GRIDS (V) - (Z) AND (1) - (4). UNLESS NOTED OTHERWISE AS (X' - X"), (+/-X' - X"), OR HILO. SS-S-1 36

3.) TYPICAL UNDERSIDE-OF-DECK ELEVATION = (113' - 5 3/4") AT THE CANOPY ROOF LEVEL, IN THE AREA BOUNDED BY GRIDS (S) - (U) AND (31) - (33). UNLESS NOTED OTHERWISE AS (X' - X"), (+/-X' - X"), OR HILO.

4.) FRAMING ELEVATIONS ARE BASED ON TOP-OF-FLOOR ELEVATION = (120' - 0"), SHOWN ON THE ARCHITECTURAL DRAWINGS.

5.) COORDINATE ALL ELEVATIONS WITH ARCHITECTURAL DRAWINGS.

6.) SLOPE STEEL UNIFORMLY TO COLUMN ELEVATIONS SHOWN ON PLANS.

BRACE FRAME KEY

0" TYP	WF / BF-X	INDICATES A BRACE FRAME ABOVE AND BELOW LEVEL
0" TYP	BF-X / WF	INDICATES A BRACE FRAME ABOVE LEVEL
0" TYP	WF / BF-X	INDICATES A BRACE FRAME BELOW LEVEL

DRA
Drummey Rosane Anderson, Inc.
225 Oakland Road, Studio 205, South Windsor, CT 06074
260 Charles Street, Studio 300, Waltham, MA 02453
Planning | Architecture | Interior Design
Tel: 617-964-1700
www.drainc.com

NORTHEAST METRO TECH

100 Hemlock Rd,
Wakefield, MA 01880

EDG
Engineers Design Group Inc.
Structural Engineers
389 Main Street, Suite 401
Malden, MA 02148
(781)396-9007
EDG@EDGINC.COM

REVISION LIST

SS-S-1	4/14/2023	STRUCTURAL STEEL ADDENDUM 1
SS-S-2	4/21/2023	STRUCTURAL STEEL ADDENDUM 2

FOR REFERENCE ONLY
SCOPE OF WORK ON THIS DRAWING IS A PART OF EARLY STRUCTURAL BID PACKAGE

© COPYRIGHT 2021 DRUMMEY ROSANE ANDERSON, INC.

MSBA 90% CD SUBMISSION

MAY 12, 2023

KEY PLAN

PROJECT NORTH | MAGNETIC NORTH

SECOND FLOOR FRAMING PLAN - AREA B

Scale: 1/8" = 1'-0"
Job No.: 20202
Drawn By: EDG
Date: MAY 12, 2023

S1-1-2B

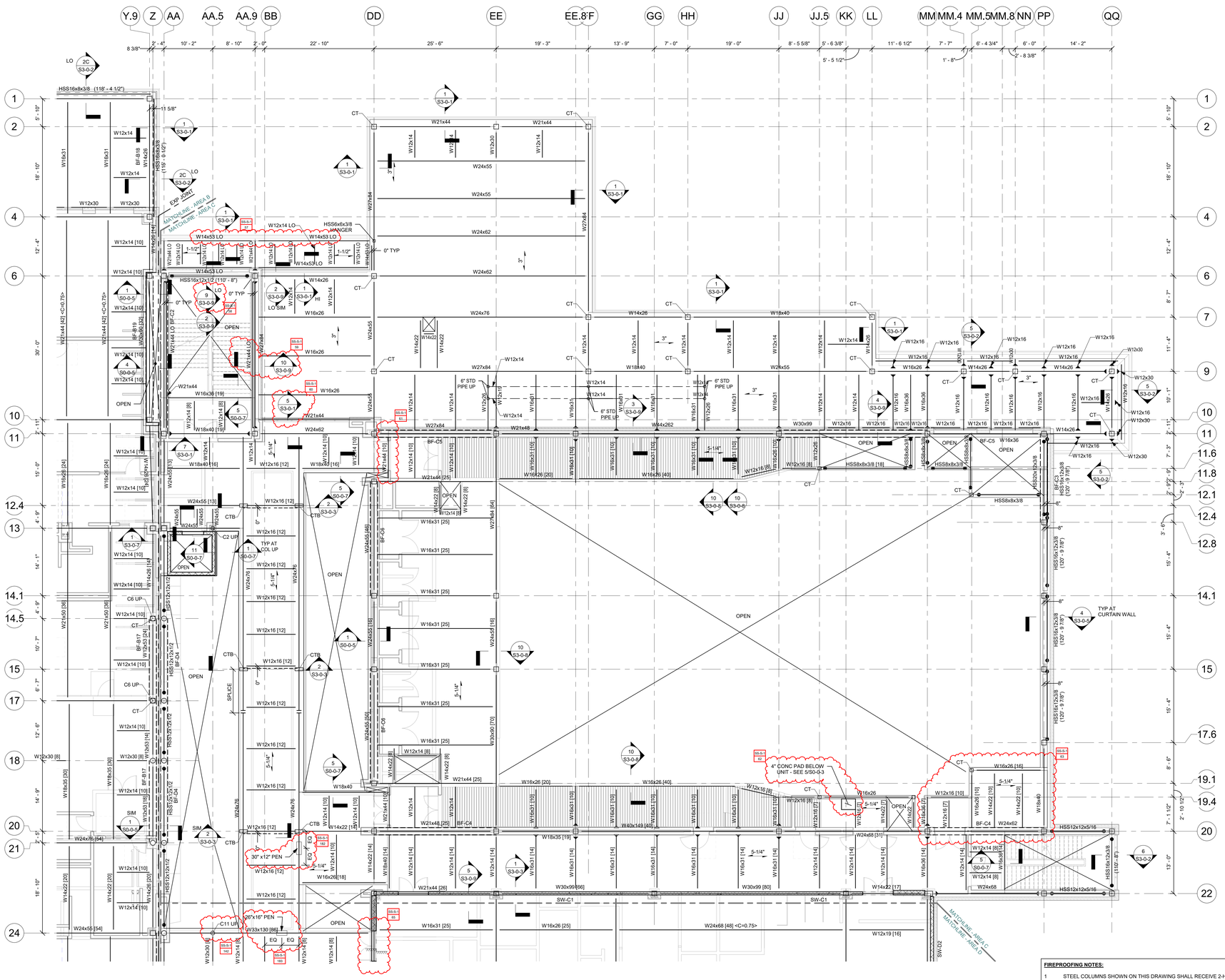

FRAMING NOTES:

1.) FOR GENERAL NOTES AND TYPICAL DETAILS SEE DRAWINGS S0-0-1, S0-0-2, S0-0-3, S0-0-4, S0-0-5 , S0-0-6, S0-0-7 AND S0-0-8.

2.) REFER TO ARCHITECTURAL DRAWINGS FOR ELEVATIONS AND VERTICAL DIMENSIONS. PITCH ALL STEEL UNIFORMLY TO LOW POINTS AT THE COLUMNS AND BENT BEAMS AS SHOWN ON THE ARCHITECTURAL DRAWINGS.

3.) BF- I ETC... INDICATES A BRACED BAY. REFER TO BRACED FRAME ELEVATIONS AND DETAILS ON DRAWINGS S4-0-1, S4-0-2, S4-0-3, S4-0-4, S4-0-5, S4-0-6, S4-0-7 AND S4-0-8 FOR ADDITIONAL INFORMATION.

4.) [XX] INDICATES THE NUMBER OF 3/4" DIAMETER x 4 1/4" LONG HEADED STUDS WELDED TO THE TOP FLANGE OF THE BEAM. SPACE STUDS EVENLY ALONG THE BEAM UNLESS NOTED OTHERWISE.

5.) INDICATES A MOMENT CONNECTION TO DEVELOP THE FULL CAPACITY OF THE MEMBER. REFER TO TYPICAL DETAILS 7, 6 AND 9 ON DRAWING S0-0-6.

6.) INDICATES A 5/16" FILLET WELD ALL AROUND. (HSS BEAM TO HSS COLUMN) WHERE BEAM DIMENSIONS EXCEED COLUMN DIMENSIONS PROVIDE 1/2" THICK STEEL CAP PLATE TO ACHIEVE ALL AROUND WELD. REFER TO TYPICAL DETAIL 2 ON DRAWING S0-0-7.

7.) < X" > INDICATES UPWARD CAMBER AT THE MID-SPAN OF THE MEMBER.

8.) 5-1/4" INDICATES SPAN DIRECTION OF 2" DEEP, 20 GAGE GALVANIZED COMPOSITE STEEL DECK WITH 3 1/4" LIGHT WEIGHT CONCRETE TOPPING. TOTAL THICKNESS = 5 1/4". REINFORCE WITH 6x6 - W2.1xW2.1 WWR.

9.) 1 1/2" INDICATES SPAN DIRECTION OF 1 1/2" DEEP, 20 GAGE ~~TYPE B, GALVANIZED STEEL ROOF DECK.~~

10.) 3" NA INDICATES SPAN DIRECTION OF 3" DEEP, 20 GAGE TYPE NA, GALVANIZED ACOUSTIC STEEL ROOF DECK. SS-S-2 19

11.) 4" LW INDICATES SPAN DIRECTION OF 1 1/2" DEEP, 20 GAGE GALVANIZED COMPOSITE STEEL DECK WITH 2 1/2" LIGHT WEIGHT CONCRETE TOPPING. TOTAL THICKNESS = 4". REINFORCE WITH 6x6 - W2.1xW2.1 WWR.

12.) FOR EXACT NUMBER, SIZE, AND LOCATION OF OPENING IN STEEL DECKING REFER TO MECHANICAL AND ARCHITECTURAL DRAWINGS. FOR FRAMING INFORMATION, REFER TO DETAILS 1, 2 AND 3 ON DRAWING S0-0-8.

13.) 6" HATCHED AREA INDICATES LOCATION OF CONCRETE SLAB WITH 3" DEEP, 18 GAGE GALVANIZED COMPOSITE STEEL DECK WITH 4" NORMAL WEIGHT CONCRETE TOPPING. TOTAL THICKNESS = 6". REINFORCE WITH 6x6 - W2.1xW2.1 WWR. REFER TO TYPICAL DETAIL 5 ON DRAWING S0.07 FOR ADDITIONAL INFORMATION. USE 3/4" DIA x 5" LONG HEADED STUDS.

14.) INDICATES A ROOF DRAIN. REFER TO TYPICAL STRUCTURAL DETAILS 1 AND 2 ON DRAWING S0-0-8 AND DETAIL 1 ON DRAWING S0-0-8. FOR DECKING SUPPORT, REFER TO DETAIL 6 ON DRAWING S0-0-7. REFER TO PLUMBING AND ARCHITECTURAL DRAWINGS FOR OPENING SIZES AND LOCATIONS.

15.) CT INDICATES A COLUMN TERMINATES AT THIS LEVEL.

16.) WF INDICATES A BEND IN THE STEEL BEAM. REFER TO TYPICAL DETAIL 9 ON DRAWING S0-0-7.

17.) OR INDICATES A CMU WALL. REFER TO TYPICAL DETAIL 8 ON DRAWING S0-0-4 FOR REINFORCEMENT, DETAIL 6 ON DRAWING S0-0-5 FOR CONNECTION OF SHEAR WALLS TO BEAMS AND COLUMNS, AND DETAIL 7 ON DRAWING S0-0-5 FOR CONNECTIONS TO STEEL BEAMS AND CONCRETE SLABS AT THE TOP OF WALL FOR NON-STRUCTURAL WALLS. REFER TO RELEVANT SECTIONS FOR CONNECTIONS OF SHEAR WALLS TO THE STRUCTURE.

18.) 8" + 2" PC PLANK INDICATES SPAN OF 8" DEEP PRESTRESSED, PRECAST CONCRETE HOLLOW CORE PLANK WITH A MINIMUM 2" OF NORMAL WEIGHT CONCRETE TOPPING. PLANK AND CONCRETE TOPPING SLAB TO BE DESIGNED TO SUPPORT A MINIMUM LIVE LOAD CAPACITY OF 150 PSF. PRECAST CONCRETE PLANK TO BE DESIGNED FOR MINIMUM OF 2 HOUR FIRE RATING.

19.) 10" + 2" PC PLANK INDICATES SPAN OF 10" DEEP PRESTRESSED, PRECAST CONCRETE HOLLOW CORE PLANK WITH A MINIMUM 2" OF NORMAL WEIGHT CONCRETE TOPPING. PLANK AND CONCRETE TOPPING SLAB TO BE DESIGNED TO SUPPORT A MINIMUM LIVE LOAD CAPACITY OF 150 PSF. PRECAST CONCRETE PLANK TO BE DESIGNED FOR MINIMUM OF 2 HOUR FIRE RATING

20.) FOR DIMENSIONS AND ELEVATIONS NOT GIVEN REFER TO ARCHITECTURAL DRAWINGS.

21.) WF INDICATES A SPLICE CONNECTION ALONG A CONTINUOUS STEEL BEAM. DESIGN SPLICE CONNECTION FOR FULL CAPACITY OF STEEL BEAM.

22.) INDICATES A SLAB DEPRESSION. REFER TO DETAILS 1 ON DRAWING S0-0-6.

23.) 9/16" INDICATES SPAN DIRECTION OF 9/16" DEEP, 20 GAGE GALVANIZED STEEL ROOF DECK.

24.) XX"xXX" INDICATES OPENING IN WEB OF STEEL BEAM FOR MECH/ ELECT/PLUMB/ FIRE PROTECT/ ETC COORDINATE WITH APPLICABLE DRAWING FOR OPENING SIZE. SEE TYPICAL DETAIL 5 AND 6 ON S0-0-6. FOR ADDITIONAL INFORMATION.

25.) 3" INDICATES SPAN DIRECTION OF 3" DEEP, 20 GAGE TYPE N, GALVANIZED STEEL ROOF DECK. SS-S-2 19

FRAMING ELEVATION NOTES:

1.) TYPICAL UNDERSIDE-OF-DECK ELEVATION = (119' - 6 3/4") AT THE SECOND FLOOR LEVEL, IN THE AREA BOUNDED BY GRIDS (AA) - (QQ) AND (11) - (22) UNLESS NOTED OTHERWISE AS (X' - X"), (+/-X' - X"), OR HI/LO.

2.) TYPICAL UNDERSIDE-OF-DECK ELEVATION = (119' - 6 3/4") AT THE LOW ROOF LEVEL, IN THE AREA BOUNDED BY GRIDS (AA.9) - (FF) AND (2) - (11). UNLESS NOTED OTHERWISE AS (X' - X"), (+/-X' - X"), OR HI/LO.

3.) TYPICAL UNDERSIDE-OF-DECK ELEVATION = (112' - 8") AT THE CANOPY ROOF LEVEL, IN THE AREA BOUNDED BY GRIDS (AA) - (DD) AND (4) - (6) SS-S-2 14

4.) FRAMING ELEVATIONS ARE BASED ON TOP-OF-FLOOR ELEVATION = (120' - 0"), SHOWN ON THE ARCHITECTURAL DRAWINGS.

5.) COORDINATE ALL ELEVATIONS WITH ARCHITECTURAL DRAWINGS.

6.) SLOPE STEEL UNIFORMLY TO COLUMN ELEVATIONS SHOWN ON PLANS.

FIREPROOFING NOTES:

1. STEEL COLUMNS SHOWN ON THIS DRAWING SHALL RECEIVE 2-HOUR FIRE RATING BY CEMENTITIOUS FIREPROOFING UNLESS INDICATED AS A ROUND HSS COLUMN OR BUILT-UP COLUMN ALONG COLUMN GRID BB.1. EXPOSED TO VIEW PORTION OF ROUND HSS COLUMNS SHALL RECEIVE 2-HOUR FIRE RATING BY INTUMESCENT MASTIC FIREPROOFING. CONCEALED FROM VIEW PORTION OF ROUND HSS COLUMN SHALL RECEIVE 2-HOUR FIRE RATING BY CEMENTITIOUS FIREPROOFING. BUILT-UP COLUMNS ALONG GRID BB.1 SHALL RECEIVE 2-HOUR RATING BY INTUMESCENT MASTIC FIREPROOFING.
2. STEEL BEAMS AND KICKERS SHOWN ON THIS DRAWING, SUPPORTING UPPER LEVEL FLOORS SHALL RECEIVE 2-HOUR RATING BY CEMENTITIOUS FIREPROOFING.
3. STEEL BEAMS AND KICKERS SHOWN ON THIS DRAWING, SUPPORTING ROOF SHALL RECEIVE 1-HOUR RATING BY CEMENTITIOUS FIREPROOFING. METAL ROOF DECK TO RECEIVE 1-HOUR FIRE RATING BY CEMENTITIOUS FIREPROOFING.
4. CONCEALED FROM VIEW BRACED FRAMES SHALL RECEIVE 2-HOUR FIRE RATING BY CEMENTITIOUS FIREPROOFING .
5. EXPOSED TO VIEW BRACED FRAMES SHALL RECEIVE 2-HOUR FIRE RATING BY INTUMENCENT MASTIC FIREPROOFING.
6. AT STAIRS 4 AND 7, ALL EXPOSED TO VIEW BEAMS AND HSS TUBES SUPPORTING STAIR LANDINGS AND STRINGERS SHALL RECEIVE 2-HOUR RATING BY INTUMESCENT MASTIC FIREPROOFING. NO FIREPROOFING REQUIRED AT SUPPLEMENTAL HSS TUBES SUPPORTING ONLY CURTAINWALL.
7. NO FIREPROOFING REQUIRED AT SUPPLEMENTAL HSS TUBES SUPPORTING CURTAINWALL CW23.
8. COORDINATE FIREPROOFING REQUIREMENTS WITH THE SPECIFICATIONS AND ARCHITECTURAL DRAWINGS.

BRACE FRAME KEY

0" TYP — WF / BF-X		INDICATES A BRACE FRAME ABOVE AND BELOW LEVEL
0" TYP — BF-X / WF		INDICATES A BRACE FRAME ABOVE LEVEL
0" TYP — WF / BF-X		INDICATES A BRACE FRAME BELOW LEVEL

DRA

Drummey Rosane Anderson, Inc.

225 Oakland Road
Studio 205
South Windsor, CT
06074

260 Charles Street
Studio 300
Waltham, MA
02453

Planning | Architecture | Interior Design

Tel: 617.964.1700
www.draiwa.com

NORTHEAST METRO TECH

100 Hemlock Rd,
Wakefield, MA 01880

EDG
Engineers Design Group Inc.
Structural Engineers
389 Main Street, Suite 401
Malden, MA 02148
(781)396-9007
EDG@EDGINC.COM

REVISION LIST

SS-S-1	4/14/2023	STRUCTURAL STEEL ADDENDUM 1
SS-S-2	4/21/2023	STRUCTURAL STEEL ADDENDUM 2

FOR REFERENCE ONLY
SCOPE OF WORK ON THIS DRAWING IS A PART OF EARLY STRUCTURAL BID PACKAGE

© COPYRIGHT 2021 DRUMMEY ROSANE ANDERSON, INC.

MSBA 90% CD SUBMISSION

MAY 12, 2023

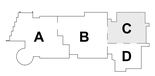

KEY PLAN

PROJECT NORTH

MAGNETIC NORTH

SECOND FLOOR FRAMING PLAN - AREA C

Scale: 1/8" = 1'-0"
Job No.: 20202
Drawn By: EDG
Date: MAY 12, 2023

S1-1-2C

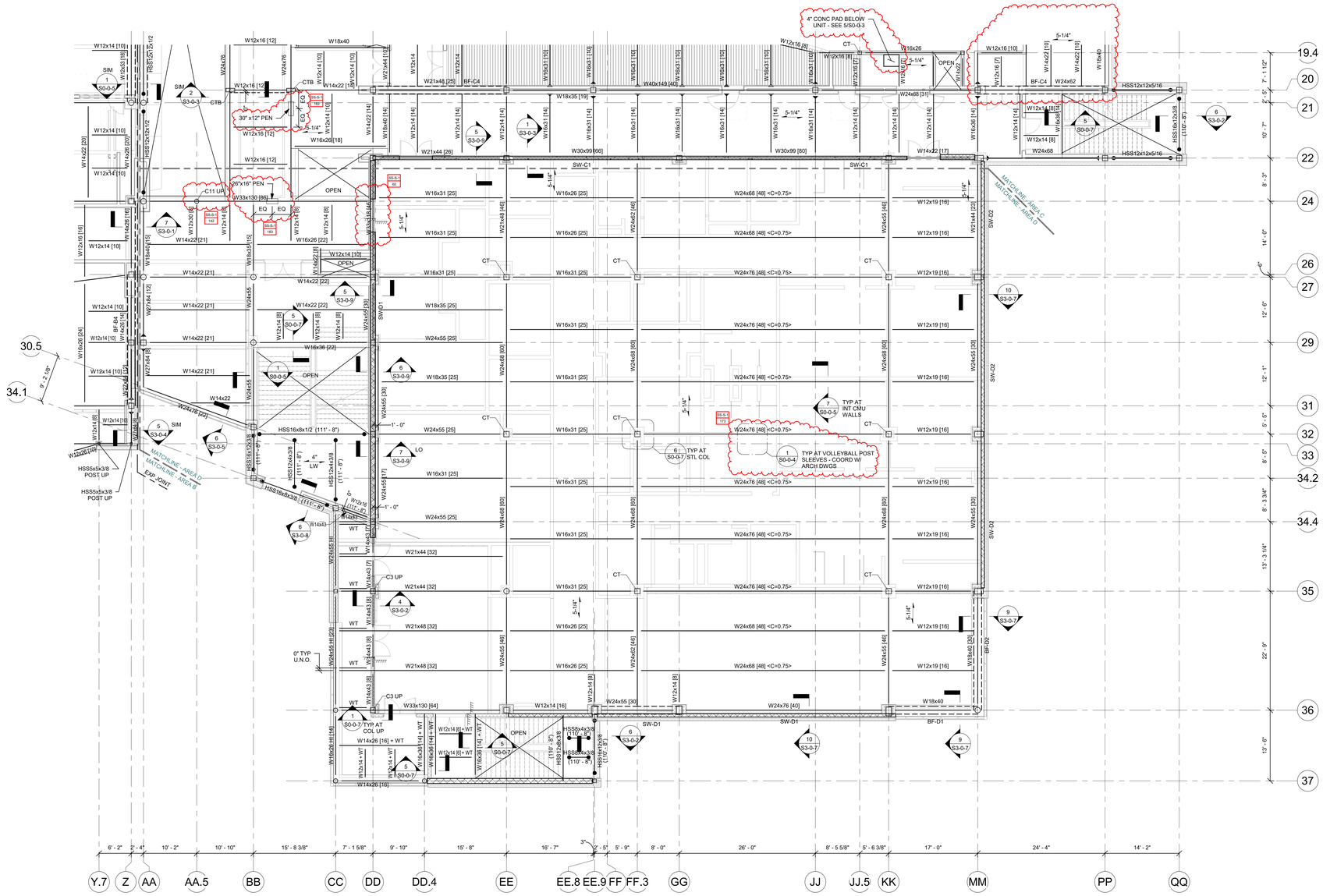

FRAMING NOTES:

1.) FOR GENERAL NOTES AND TYPICAL DETAILS SEE DRAWINGS S0-0-1, S0-0-2, S0-0-3, S0-0-4, S0-0-5 , S0-0-6, S0-0-7 AND S0-0-8.

2.) REFER TO ARCHITECTURAL DRAWINGS FOR ELEVATIONS AND VERTICAL DIMENSIONS. PITCH ALL STEEL UNIFORMLY TO LOW POINTS AT THE COLUMNS AND BENT BEAMS AS SHOWN ON THE ARCHITECTURAL DRAWINGS.

3.) BF-1 ETC... INDICATES A BRACED BAY. REFER TO BRACED FRAME ELEVATIONS AND DETAILS ON DRAWINGS S4-0-1, S4-0-2, S4-0-3, S4-0-4, S4-0-5, S4-0-6, S4-0-7 AND S4-0-8 FOR ADDITIONAL INFORMATION.

4.) [XX] INDICATES THE NUMBER OF 3/4" DIAMETER x 4 1/4" LONG HEADED STUDS WELDED TO THE TOP FLANGE OF THE BEAM. SPACE STUDS EVENLY ALONG THE BEAM UNLESS NOTED OTHERWISE.

5.) INDICATES A MOMENT CONNECTION TO DEVELOP THE FULL CAPACITY OF THE MEMBER. REFER TO TYPICAL DETAILS 7, 8 AND 9 ON DRAWING S0-0-6.

6.) INDICATES A 5/16" FILLET WELD ALL AROUND. (HSS BEAM TO HSS COLUMN) WHERE BEAM DIMENSIONS EXCEED COLUMN DIMENSIONS PROVIDE 1/2" THICK STEEL CAP PLATE TO ACHIEVE ALL AROUND WELD. REFER TO TYPICAL DETAIL 2 ON DRAWING S0-0-7.

7.) < X" > INDICATES UPWARD CAMBER AT THE MID-SPAN OF THE MEMBER.

8.) 5-1/4" INDICATES SPAN DIRECTION OF 2" DEEP, 20 GAGE GALVANIZED COMPOSITE STEEL DECK WITH 3 1/4" LIGHT WEIGHT CONCRETE TOPPING. TOTAL THICKNESS = 5 1/4". REINFORCE WITH 6x6 - W2.1xW2.1 WWR.

9.) 1 1/2" INDICATES SPAN DIRECTION OF 1 1/2" DEEP, 20 GAGE TYPE B, GALVANIZED STEEL ROOF DECK.

10.) 3" NA INDICATES SPAN DIRECTION OF 3" DEEP, 20 GAGE TYPE NA, GALVANIZED ACOUSTIC STEEL ROOF DECK. SS-S-2 18

11.) 4" LW INDICATES SPAN DIRECTION OF 4 1/2" DEEP, 20 GAGE GALVANIZED COMPOSITE STEEL DECK WITH 2 1/2" LIGHT WEIGHT CONCRETE TOPPING. TOTAL THICKNESS = 4". REINFORCE WITH 6x6 - W2.1xW2.1 WWR.

12.) FOR EXACT NUMBER, SIZE, AND LOCATION OF OPENING IN STEEL DECKING REFER TO MECHANICAL AND ARCHITECTURAL DRAWINGS. FOR FRAMING INFORMATION, REFER TO DETAILS 1, 2 AND 3 ON DRAWING S0-0-8.

13.) 6" HATCHED AREA INDICATES LOCATION OF CONCRETE SLAB WITH 3" DEEP, 18 GAGE GALVANIZED COMPOSITE STEEL DECK WITH 4" NORMAL WEIGHT CONCRETE TOPPING. TOTAL THICKNESS = 6". REINFORCE WITH 6x6 - W2.1xW2.1 WWR. REFER TO TYPICAL DETAIL 5 ON DRAWING S0.07 FOR ADDITIONAL INFORMATION. USE 3/4" Dia x 5" LONG HEADED STUDS.

14.) ⊗ INDICATES A ROOF DRAIN. REFER TO TYPICAL STRUCTURAL DETAILS 1 AND 2 ON DRAWING S0-0-8 AND DETAIL 1 ON DRAWING S0-0-8. FOR DECKING SUPPORT, REFER TO DETAIL 6 ON DRAWING S0-0-7. REFER TO PLUMBING AND ARCHITECTURAL DRAWINGS FOR OPENING SIZES AND LOCATIONS.

15.) CT INDICATES A COLUMN TERMINATES AT THIS LEVEL.

16.) WF INDICATES A BEND IN THE STEEL BEAM. REFER TO TYPICAL DETAIL 9 ON DRAWING S0-0-7.

17.) INDICATES A CMU WALL. REFER TO TYPICAL DETAIL 8 ON DRAWING S0-0-4 FOR REINFORCEMENT, DETAIL 6 ON DRAWING S0-0-5 FOR CONNECTION OF SHEAR WALLS TO BEAMS AND COLUMNS, AND DETAIL 7 ON DRAWING S0-0-5 FOR CONNECTIONS TO STEEL BEAMS AND CONCRETE SLABS AT THE TOP OF WALL FOR NON-STRUCTURAL WALLS. REFER TO RELEVANT SECTIONS FOR CONNECTIONS OF SHEAR WALLS TO THE STRUCTURE.

18.) 8" + 2" PC PLANK INDICATES SPAN OF 8" DEEP PRESTRESSED, PRECAST CONCRETE HOLLOW CORE PLANK WITH A MINIMUM 2" OF NORMAL WEIGHT CONCRETE TOPPING. PLANK AND CONCRETE TOPPING SLAB TO BE DESIGNED TO SUPPORT A MINIMUM LIVE LOAD CAPACITY OF 150 PSF. PRECAST CONCRETE PLANK TO BE DESIGNED FOR MINIMUM OF 2 HOUR FIRE RATING.

19.) 10" + 2" PC PLANK INDICATES SPAN OF 10" DEEP PRESTRESSED, PRECAST CONCRETE HOLLOW CORE PLANK WITH A MINIMUM 2" OF NORMAL WEIGHT CONCRETE TOPPING. PLANK AND CONCRETE TOPPING SLAB TO BE DESIGNED TO SUPPORT A MINIMUM LIVE LOAD CAPACITY OF 150 PSF. PRECAST CONCRETE PLANK TO BE DESIGNED FOR MINIMUM OF 2 HOUR FIRE RATING

20.) FOR DIMENSIONS AND ELEVATIONS NOT GIVEN REFER TO ARCHITECTURAL DRAWINGS.

21.) WF INDICATES A SPLICE CONNECTION ALONG A CONTINUOUS STEEL BEAM. DESIGN SPLICE CONNECTION FOR FULL CAPACITY OF STEEL BEAM.

22.) INDICATES A SLAB DEPRESSION. REFER TO DETAILS 1 ON DRAWING S0-0-6.

23.) 9/16" INDICATES SPAN DIRECTION OF 9/16" DEEP, 20 GAGE GALVANIZED STEEL ROOF DECK.

24.) XX"xXX" INDICATES OPENING IN WEB OF STEEL BEAM FOR MECH/ ELECT/PLUMB/ FIRE PROTECT/ ETC COORDINATE WITH APPLICABLE DRAWING FOR OPENING SIZE. SEE TYPICAL DETAIL 5 AND 6 ON SO-0-8. FOR ADDITIONAL INFORMATION.

25.) 3" INDICATES SPAN DIRECTION OF 3" DEEP, 20 GAGE TYPE N, GALVANIZED STEEL ROOF DECK. SS-S-2 17

FRAMING ELEVATION NOTES:

1.) TYPICAL UNDERSIDE-OF-DECK ELEVATION = (119' - 6 3/4") AT THE SECOND FLOOR LEVEL. IN THE AREA BOUNDED BY GRIDS (AA) - (DD) AND (22) - (34.4). UNLESS NOTED OTHERWISE AS (X' - X"), (+/-X' - X"), OR HI/LO.

2.) TYPICAL UNDERSIDE-OF-DECK ELEVATION IS DEPRESSED BELOW(119' - 6 3/4") AT THE GYM FLOOR LEVEL. IN THE AREA BOUNDED BY GRIDS (DD) - (MM) AND (22) - (37). ELEVATION IS TO BE DETERMINED BASED ON THICKNESS OF GYM-FLOORING SYSTEM. UNLESS NOTED OTHERWISE AS (X' - X"), (+/-X' - X"), OR HI/LO.

3.) FRAMING ELEVATIONS ARE BASED ON TOP-OF-FLOOR ELEVATION = (120' - 0"), SHOWN ON THE ARCHITECTURAL DRAWINGS.

4.) COORDINATE ALL ELEVATIONS WITH ARCHITECTURAL DRAWINGS.

5.) SLOPE STEEL UNIFORMLY TO COLUMN ELEVATIONS SHOWN ON PLANS.

FIREPROOFING NOTES:

1. STEEL COLUMNS SHOWN ON THIS DRAWING SHALL RECEIVE 2-HOUR FIRE RATING BY CEMENTITIOUS FIREPROOFING UNLESS INDICATED AS A ROUND HSS COLUMN OR BUILT-UP COLUMN ALONG COLUMN GRID BB.1. EXPOSED TO VIEW PORTION OF ROUND HSS COLUMNS SHALL RECEIVE 2-HOUR FIRE RATING BY INTUMESCENT MASTIC FIREPROOFING. CONCEALED FROM VIEW PORTION OF ROUND HSS COLUMN SHALL RECEIVE 2-HOUR FIRE RATING BY CEMENTITIOUS FIREPROOFING. BUILT-UP COLUMNS ALONG GRID BB.1 SHALL RECEIVE 2-HOUR RATING BY INTUMESCENT MASTIC FIREPROOFING.

2. STEEL BEAMS AND KICKERS SHOWN ON THIS DRAWING, SUPPORTING UPPER LEVEL FLOORS SHALL RECEIVE 2-HOUR RATING BY CEMENTITIOUS FIREPROOFING.

3. STEEL BEAMS AND KICKERS SHOWN ON THIS DRAWING, SUPPORTING ROOF SHALL RECEIVE 1-HOUR RATING BY CEMENTITIOUS FIREPROOFING. METAL ROOF DECK TO RECEIVE 1-HOUR FIRE RATING BY CEMENTITIOUS FIREPROOFING.

4. CONCEALED FROM VIEW BRACED FRAMES AND HORIZONTAL HSS GIRTS SHALL RECEIVE 2-HOUR FIRE RATING BY CEMENTITIOUS FIREPROOFING .

5 EXPOSED TO VIEW BRACED FRAMES AND HORIZONTAL HSS GIRTS SHALL RECEIVE 2-HOUR FIRE RATING BY INTUMENCENT MASTIC FIREPROOFING.

6. AT STAIRS 3, 5, AND 6, ALL EXPOSED TO VIEW BEAMS AND HSS TUBES SUPPORTING STAIR LANDINGS AND STRINGERS SHALL RECEIVE 2-HOUR RATING BY INTUMESCENT MASTIC FIREPROOFING. NO FIREPROOFING REQUIRED AT SUPPLEMENTAL HSS TUBES SUPPORTING ONLY CURTAINWALL.

7. COORDINATE FIREPROOFING REQUIREMENTS WITH THE SPECIFICATIONS AND ARCHITECTURAL DRAWINGS.

BRACE FRAME KEY

0" TYP WF BF-X	INDICATES A BRACE FRAME ABOVE AND BELOW LEVEL
0" TYP BF-X WF	INDICATES A BRACE FRAME ABOVE LEVEL
0" TYP WF BF-X	INDICATES A BRACE FRAME BELOW LEVEL

DRA
Drummey Rosane Anderson, Inc.
225 Oakland Road Studio 205 South Windsor, CT 06074
260 Charles Street Studio 300 Waltham, MA 02453
Planning | Architecture | Interior Design
Tel: 617-964-1700
www.draiwa.com

NORTHEAST METRO TECH

100 Hemlock Rd,
Wakefield, MA 01880

EDG
Engineers Design Group Inc.
Structural Engineers
389 Main Street, Suite 401
Malden, MA 02148
(781)396-9007
EDG@EDGINC.COM

REVISION LIST

SS-S-1	4/14/2023	STRUCTURAL STEEL ADDENDUM 1
SS-S-2	4/21/2023	STRUCTURAL STEEL ADDENDUM 2

FOR REFERENCE ONLY
SCOPE OF WORK ON THIS DRAWING IS A PART OF EARLY STRUCTURAL BID PACKAGE

© COPYRIGHT 2021 DRUMMEY ROSANE ANDERSON, INC.

MSBA 90% CD SUBMISSION

MAY 12, 2023

KEY PLAN

PROJECT NORTH | MAGNETIC NORTH

SECOND FLOOR FRAMING PLAN - AREA D

Scale: 1/8" = 1'-0"
Job No.: 20202
Drawn By: EDG
Date: MAY 12, 2023

S1-1-2D

FIREPROOFING NOTES:

1. STEEL COLUMNS, SHOWN ON THIS DRAWING, SHALL RECEIVE 2-HOUR FIRE RATING BY CEMENTITIOUS FIREPROOFING UNLESS INDICATED AS A ROUND HSS COLUMN. EXPOSED TO VIEW PORTION OF ROUND HSS COLUMNS SHALL RECEIVE 2-HOUR FIRE RATING BY INTUMESCENT MASTIC FIREPROOFING. CONCEALED FROM VIEW PORTION OF ROUND HSS COLUMN SHALL RECEIVE 2-HOUR FIRE RATING BY CEMENTITIOUS FIREPROOFING.
2. STEEL BEAMS AND KICKERS SHOWN ON THIS DRAWING, SUPPORTING UPPER LEVEL FLOORS SHALL RECEIVE 2-HOUR RATING BY CEMENTITIOUS FIREPROOFING.
3. STEEL BEAMS AND KICKERS SHOWN ON THIS DRAWING, SUPPORTING ROOF SHALL RECEIVE 1-HOUR RATING BY CEMENTITIOUS FIREPROOFING. METAL ROOF DECK TO RECEIVE 1-HOUR FIRE RATING BY CEMENTITOUS FIREPROOFING.
4. CONCEALED FROM VIEW BRACED FRAMES SHALL RECEIVE 2-HOUR FIRE RATING BY CEMENTITIOUS FIREPROOFING .
5. EXPOSED TO VIEW BRACED FRAMES SHALL RECEIVE 2-HOUR FIRE RATING BY INTUMENCENT MASTIC FIREPROOFING.
6. AT STAIRS 1 AND 2, EXPOSED TO VIEW HORIZONTAL HSS TUBES SHALL RECEIVE 2-HOUR RATING BY INTUMESCENT MASTIC FIREPROOFING.
7. NO FIREPROOFING REQUIRED AT SUPPLIMENTAL STEEL HSS GIRTS, AND OUTRIGGERS SUPPORTING CURTAINWALL IN THE LIBRARY ROTUNDA.
8. COORDINATE FIREPROOFING REQUIREMENTS WITH THE SPECIFICATIONS AND ARCHITECTURAL DRAWINGS.

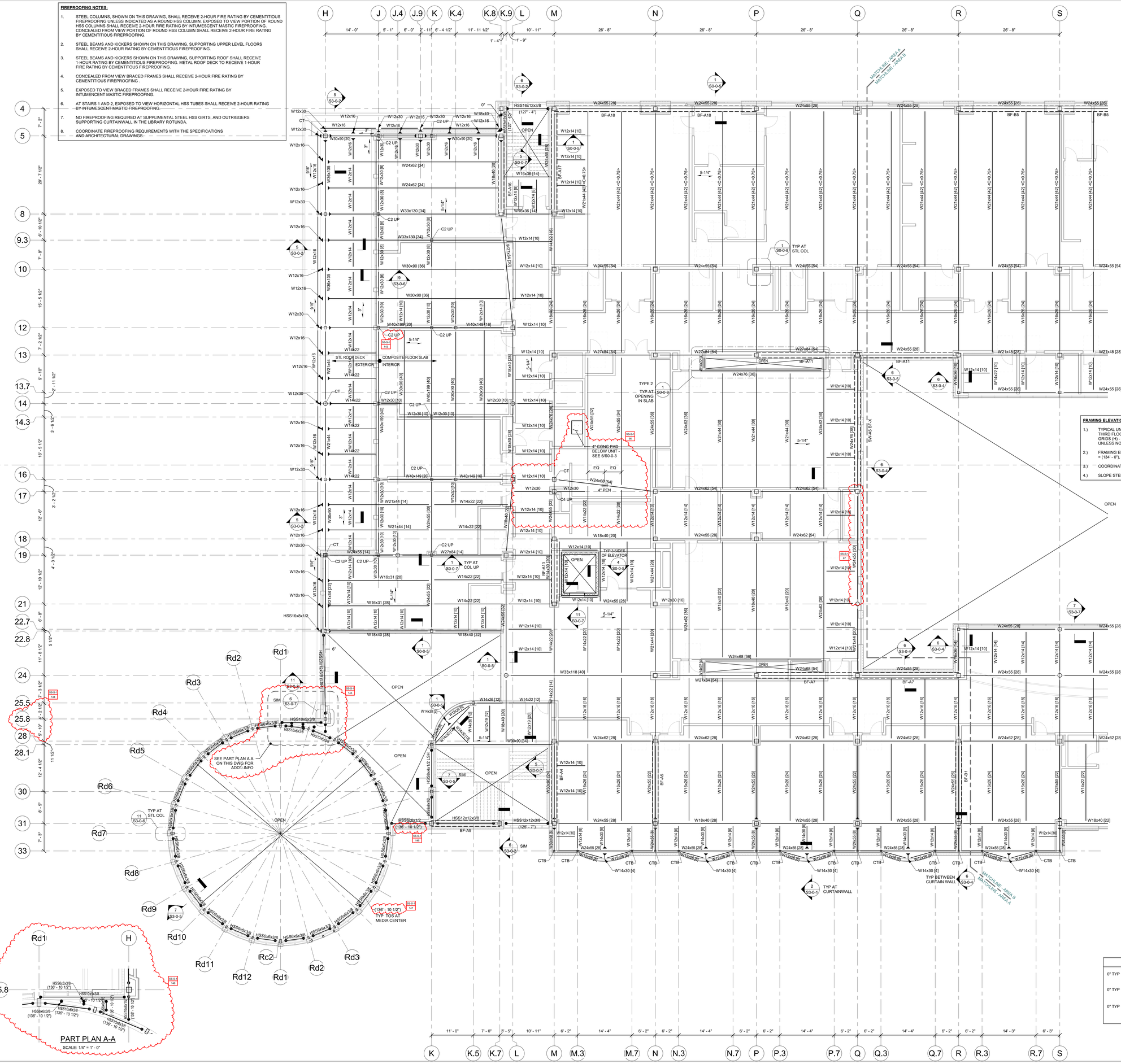

FRAMING ELEVATION NOTES:

1.) TYPICAL UNDERSIDE-OF-DECK ELEVATION = (133' - 6 3/4") AT THE THIRD FLOOR LEVEL, IN THE AREA BOUNDED BY GIRDS (H) - (S) AND (4) - (33). UNLESS NOTED OTHERWISE AS (X' - X"), (+/-X' - X"), OR HI/LO.

2.) FRAMING ELEVATIONS ARE BASED ON TOP-OF-FLOOR ELEVATION = (134' - 0"), SHOWN ON THE ARCHITECTURAL DRAWINGS.

3.) COORDINATE ALL ELEVATIONS WITH ARCHITECTURAL DRAWINGS.

4.) SLOPE STEEL UNIFORMLY TO COLUMN ELEVATIONS SHOWN ON PLANS.

BRACE FRAME KEY

0" TYP — WF / BF-X	INDICATES A BRACE FRAME ABOVE AND BELOW LEVEL
0" TYP — BF-X / WF	INDICATES A BRACE FRAME ABOVE LEVEL
0" TYP — WF / BF-X	INDICATES A BRACE FRAME BELOW LEVEL

PART PLAN A-A

SCALE: 1/4" = 1' - 0"

DRA

Drummey Rosane Anderson, Inc.

225 Oakland Road
Studio 205
South Windsor, CT
06074

260 Charles Street
Studio 300
Waltham, MA
02453

Planning | Architecture | Interior Design

Tel: 617.964.1700
www.draiwa.com

NORTHEAST METRO TECH

100 Hemlock Rd,
Wakefield, MA 01880

EDG

Engineers Design Group Inc.
Structural Engineers
389 Main Street, Suite 401
Malden, MA 02148
(781)396-9007
EDG@EDGINC.COM

REVISION LIST

SS-S-1	4/14/2023	STRUCTURAL STEEL ADDENDUM 1

FOR REFERENCE ONLY
SCOPE OF WORK ON THIS DRAWING IS A PART OF EARLY STRUCTURAL BID PACKAGE

© COPYRIGHT 2021 DRUMMEY ROSANE ANDERSON, INC.

MSBA 90% CD SUBMISSION

MAY 12, 2023

KEY PLAN

PROJECT NORTH

MAGNETIC NORTH

THIRD FLOOR FRAMING PLAN - AREA A

Scale: As indicated
Job No.: 20202
Drawn By: EDG
Date: MAY 12, 2023

S1-1-3A

FIREPROOFING NOTES:

1. STEEL COLUMNS, SHOWN ON THIS DRAWING, SHALL RECEIVE 2-HOUR FIRE RATING BY FIREPROOFING UNLESS INDICATED AS A ROUND HSS COLUMN. EXPOSED TO VIEW PORTION OF ROUND HSS COLUMNS SHALL RECEIVE 2-HOUR FIRE RATING BY INTUMESCENT MASTIC FIREPROOFING. CONCEALED FROM VIEW PORTION OF ROUND HSS COLUMN SHALL RECEIVE 2-HOUR FIRE RATING BY CEMENTITIOUS FIREPROOFING.
2. STEEL BEAMS AND KICKERS SHOWN ON THIS DRAWING, SUPPORTING UPPER LEVEL FLOORS SHALL RECEIVE 2-HOUR RATING BY CEMENTITIOUS FIREPROOFING.
3. STEEL BEAMS AND KICKERS SHOWN ON THIS DRAWING, SUPPORTING ROOF SHALL RECEIVE 1-HOUR RATING BY CEMENTITIOUS FIREPROOFING. METAL ROOF DECK TO RECEIVE 1-HOUR FIRE RATING BY CEMENTITOUS FIREPROOFING.
4. CONCEALED FROM VIEW BRACED FRAMES SHALL RECEIVE 2-HOUR FIRE RATING BY CEMENTITIOUS FIREPROOFING .
5. EXPOSED TO VIEW BRACED FRAMES SHALL RECEIVE 2-HOUR FIRE RATING BY INTUMENCENT MASTIC FIREPROOFING.
6. COORDINATE FIREPROOFING REQUIREMENTS WITH THE SPECIFICATIONS AND ARCHITECTURAL DRAWINGS.

FRAMING ELEVATION NOTES:

1.) TYPICAL UNDERSIDE-OF-DECK ELEVATION = (133' - 6 3/4") AT THE THIRD FLOOR LEVEL, IN THE AREA BOUNDED BY GIRIDS (Q) - (Z) AND (4) - (33).

2.) FRAMING ELEVATIONS ARE BASED ON TOP-OF-FLOOR ELEVATION = (134' - 0"), SHOWN ON THE ARCHITECTURAL DRAWINGS.

3.) COORDINATE ALL ELEVATIONS WITH ARCHITECTURAL DRAWINGS.

4.) SLOPE STEEL UNIFORMLY TO COLUMN ELEVATIONS SHOWN ON PLANS.

BRACE FRAME KEY

0" TYP	WF / BF-X	INDICATES A BRACE FRAME ABOVE AND BELOW LEVEL
0" TYP	BF-X / WF	INDICATES A BRACE FRAME ABOVE LEVEL
0" TYP	WF / BF-X	INDICATES A BRACE FRAME BELOW LEVEL

DRA

Drummey Rosane Anderson, Inc.

225 Oakland Road
Studio 205
South Windsor, CT
06074

260 Charles Street
Studio 300
Waltham, MA
02453

Planning | Architecture | Interior Design

Tel: 617.964.1700
www.draiwa.com

NORTHEAST METRO TECH

100 Hemlock Rd,
Wakefield, MA 01880

EDG

Engineers Design Group Inc.
Structural Engineers
389 Main Street, Suite 401
Malden, MA 02148
(781)396-9007
EDG@EDGINC.COM

REVISION LIST

SS-S-1	4/14/2023	STRUCTURAL STEEL ADDENDUM 1

FOR REFERENCE ONLY
SCOPE OF WORK ON THIS DRAWING IS A PART OF EARLY STRUCTURAL BID PACKAGE

© COPYRIGHT 2021 DRUMMEY ROSANE ANDERSON, INC.

MSBA 90% CD SUBMISSION

MAY 12, 2023

KEY PLAN

PROJECT NORTH

MAGNETIC NORTH

THIRD FLOOR FRAMING PLAN - AREA B

Scale: 1/8" = 1'-0"
Job No.: 20202
Drawn By: EDG
Date: MAY 12, 2023

S1-1-3B

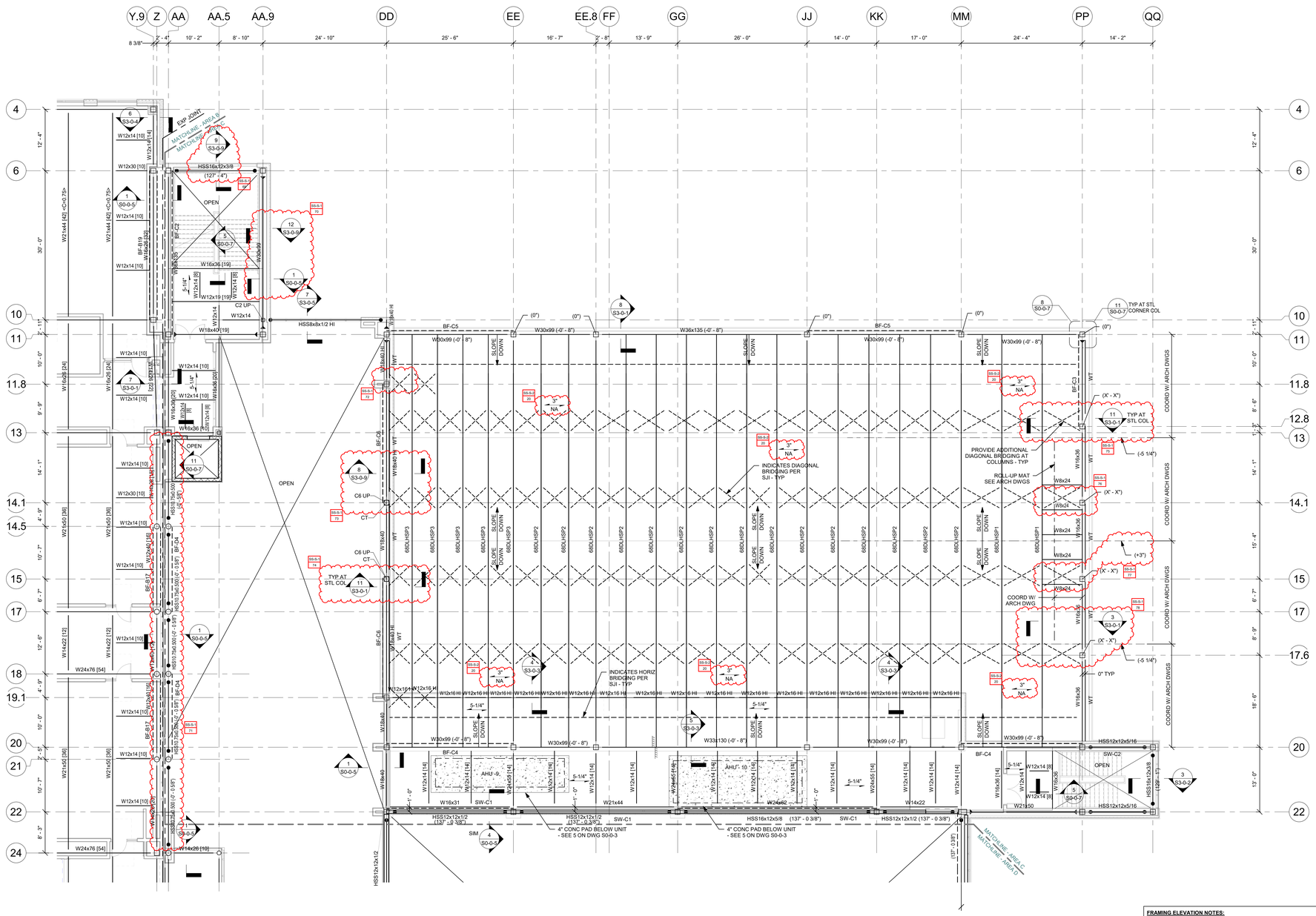

FRAMING NOTES:

1.) FOR GENERAL NOTES AND TYPICAL DETAILS SEE DRAWINGS S0-0-1, S0-0-2, S0-0-3, S0-0-4, S0-0-5 , S0-0-6, S0-0-7 AND S0-0-8.

2.) REFER TO ARCHITECTURAL DRAWINGS FOR ELEVATIONS AND VERTICAL DIMENSIONS. PITCH ALL STEEL UNIFORMLY TO LOW POINTS AT THE COLUMNS AND BENT BEAMS AS SHOWN ON THE ARCHITECTURAL DRAWINGS.

3.) BF-1 ETC... INDICATES A BRACED BAY. REFER TO BRACED FRAME ELEVATIONS AND DETAILS ON DRAWINGS S4-0-1, S4-0-2, S4-0-3, S4-0-4, S4-0-5, S4-0-6, S4-0-7 AND S4-0-8 FOR ADDITIONAL INFORMATION.

4.) [XX] INDICATES THE NUMBER OF 3/4" DIAMETER x 4 1/4" LONG HEADED STUDS WELDED TO THE TOP FLANGE OF THE BEAM. SPACE STUDS EVENLY ALONG THE BEAM UNLESS NOTED OTHERWISE.

5.) INDICATES A MOMENT CONNECTION TO DEVELOP THE FULL CAPACITY OF THE MEMBER. REFER TO TYPICAL DETAILS 7, 8 AND 9 ON DRAWING S0-0-6.

6.) INDICATES A 5/16" FILLET WELD ALL AROUND. (HSS BEAM TO HSS COLUMN) WHERE BEAM DIMENSIONS EXCEED COLUMN DIMENSIONS PROVIDE 1/2" THICK STEEL CAP PLATE TO ACHIEVE ALL AROUND WELD. REFER TO TYPICAL DETAIL 2 ON DRAWING S0-0-7.

7.) < X" > INDICATES UPWARD CAMBER AT THE MID-SPAN OF THE MEMBER.

8.) 5-1/4" INDICATES SPAN DIRECTION OF 2" DEEP, 20 GAGE GALVANIZED COMPOSITE STEEL DECK WITH 3 1/4" LIGHT WEIGHT CONCRETE TOPPING. TOTAL THICKNESS = 5 1/4". REINFORCE WITH 6x6 - W2.1xW2.1 WWR.

9.) 1 1/2" INDICATES SPAN DIRECTION OF 1 1/2" DEEP, 20 GAGE TYPE B, GALVANIZED STEEL ROOF DECK.

10.) 3" NA INDICATES SPAN DIRECTION OF 3" DEEP, 20 GAGE TYPE NA, GALVANIZED ACOUSTIC STEEL ROOF DECK. SS-S-1 71

11.) 4" LW INDICATES SPAN DIRECTION OF 4" DEEP, 20 GAGE GALVANIZED COMPOSITE STEEL DECK WITH 2 1/2" LIGHT WEIGHT CONCRETE TOPPING. TOTAL THICKNESS = 4". REINFORCE WITH 6x6 - W2.1xW2.1 WWR.

12.) FOR EXACT NUMBER, SIZE, AND LOCATION OF OPENING IN STEEL DECKING REFER TO MECHANICAL AND ARCHITECTURAL DRAWINGS. FOR FRAMING INFORMATION, REFER TO DETAILS 1, 2 AND 3 ON DRAWING S0-0-8.

13.) 6" HATCHED AREA INDICATES LOCATION OF CONCRETE SLAB WITH 3" DEEP, 18 GAGE GALVANIZED COMPOSITE STEEL DECK WITH 4" NORMAL WEIGHT CONCRETE TOPPING. TOTAL THICKNESS = 6". REINFORCE WITH 6x6 - W2.1xW2.1 WWR. REFER TO TYPICAL DETAIL 5 ON DRAWING S0.07 FOR ADDITIONAL INFORMATION. USE 3/4" DIA x 5" LONG HEADED STUDS.

14.) ⊗ INDICATES A ROOF DRAIN. REFER TO TYPICAL STRUCTURAL DETAILS 1 AND 2 ON DRAWING S0-0-8 AND DETAIL 1 ON DRAWING S0-0-8. FOR DECKING SUPPORT, REFER TO DETAIL 6 ON DRAWING S0-0-7. REFER TO PLUMBING AND ARCHITECTURAL DRAWINGS FOR OPENING SIZES AND LOCATIONS.

15.) CT INDICATES A COLUMN TERMINATES AT THIS LEVEL.

16.) WF INDICATES A BEND IN THE STEEL BEAM. REFER TO TYPICAL DETAIL 9 ON DRAWING S0-0-7.

17.) OR / OR INDICATES A CMU WALL. REFER TO TYPICAL DETAIL 8 ON DRAWING S0-0-4 FOR REINFORCEMENT, DETAIL 6 ON DRAWING S0-0-5 FOR CONNECTION OF SHEAR WALLS TO BEAMS AND COLUMNS, AND DETAIL 7 ON DRAWING S0-0-5 FOR CONNECTIONS TO STEEL BEAMS AND CONCRETE SLABS AT THE TOP OF WALL FOR NON-STRUCTURAL WALLS. REFER TO RELEVANT SECTIONS FOR CONNECTIONS OF SHEAR WALLS TO THE STRUCTURE.

18.) 8" + 2" PC PLANK INDICATES SPAN OF 8" DEEP PRESTRESSED, PRECAST CONCRETE HOLLOW CORE PLANK WITH A MINIMUM 2" OF NORMAL WEIGHT CONCRETE TOPPING. PLANK AND CONCRETE TOPPING SLAB TO BE DESIGNED TO SUPPORT A MINIMUM LIVE LOAD CAPACITY OF 150 PSF. PRECAST CONCRETE PLANK TO BE DESIGNED FOR MINIMUM OF 2 HOUR FIRE RATING.

19.) 10" + 2" PC PLANK INDICATES SPAN OF 10" DEEP PRESTRESSED, PRECAST CONCRETE HOLLOW CORE PLANK WITH A MINIMUM 2" OF NORMAL WEIGHT CONCRETE TOPPING. PLANK AND CONCRETE TOPPING SLAB TO BE DESIGNED TO SUPPORT A MINIMUM LIVE LOAD CAPACITY OF 150 PSF. PRECAST CONCRETE PLANK TO BE DESIGNED FOR MINIMUM OF 2 HOUR FIRE RATING

20.) FOR DIMENSIONS AND ELEVATIONS NOT GIVEN REFER TO ARCHITECTURAL DRAWINGS.

21.) WF INDICATES A SPLICE CONNECTION ALONG A CONTINUOUS STEEL BEAM. DESIGN SPLICE CONNECTION FOR FULL CAPACITY OF STEEL BEAM.

22.) INDICATES A SLAB DEPRESSION. REFER TO DETAILS 1 ON DRAWING S0-0-6.

23.) 9/16" INDICATES SPAN DIRECTION OF 9/16" DEEP, 20 GAGE GALVANIZED STEEL ROOF DECK.

24.) XX"xXX" INDICATES OPENING IN WEB OF STEEL BEAM FOR MECH/ ELECT/PLUMB/ FIRE PROTECT/ ETC COORDINATE WITH APPLICABLE DRAWING FOR OPENING SIZE. SEE TYPICAL DETAIL 5 AND 6 ON S0-0-6 FOR ADDITIONAL INFORMATION.

25.) 3" INDICATES SPAN DIRECTION OF 3" DEEP, 20 GAGE TYPE N, GALVANIZED STEEL ROOF DECK. SS-S-1 19

FIREPROOFING NOTES:

1. STEEL COLUMNS SHOWN ON THIS DRAWING SHALL RECEIVE 2-HOUR FIRE RATING BY CEMENTITIOUS FIREPROOFING UNLESS INDICATED AS A ROUND HSS COLUMN. EXPOSED TO VIEW PORTION OF ROUND HSS COLUMNS SHALL RECEIVE 2-HOUR FIRE RATING BY INTUMESCENT MASTIC FIREPROOFING. CONCEALED FROM VIEW PORTION OF ROUND HSS COLUMN SHALL RECEIVE 2-HOUR FIRE RATING BY CEMENTITIOUS FIREPROOFING

2. STEEL BEAMS AND KICKERS SHOWN ON THIS DRAWING, SUPPORTING UPPER LEVEL FLOORS SHALL RECEIVE 2-HOUR RATING BY CEMENTITIOUS FIREPROOFING.

3. STEEL BEAMS AND KICKERS SHOWN ON THIS DRAWING, SUPPORTING ROOF SHALL RECEIVE 1-HOUR RATING BY CEMENTITIOUS FIREPROOFING. METAL ROOF DECK TO RECEIVE 1-HOUR FIRE RATING BY CEMENTITIOUS FIREPROOFING.

4. IN MULTIPURPOSE JOISTS BETWEEN GRIDS DD AND MM (INCLUDING MM) SHALL RECEIVE 2-HOUR FIRE RATING BY CEMENTITIOUS FIREPROOFING. REMAINING JOIST TO RECEIVE 1-HOUR FIRE RATING BY CEMENTITIOUS FIREPROOFING.

5. CONCEALED FROM VIEW BRACED FRAMES AND HORIZONTAL HSS GIRTS SHALL RECEIVE 2-HOUR FIRE RATING BY CEMENTITIOUS FIREPROOFING.

6. EXPOSED TO VIEW BRACED FRAMES AND HORIZONTAL HSS GIRTS SHALL RECEIVE 2-HOUR FIRE RATING BY INTUMESCENT MASTIC FIREPROOFING.

7. AT STAIRS 4 AND 7, ALL EXPOSED TO VIEW BEAMS AND HSS TUBES SUPPORTING STAIR LANDINGS AND STRINGERS SHALL RECEIVE 2-HOUR RATING BY INTUMESCENT MASTIC FIREPROOFING. NO FIREPROOFING REQUIRED AT SUPPLEMENTAL HSS TUBES SUPPORTING ONLY CURTAINWALL.

8. COORDINATE FIREPROOFING REQUIREMENTS WITH THE SPECIFICATIONS AND ARCHITECTURAL DRAWINGS.

FRAMING ELEVATION NOTES:

1.) TYPICAL UNDERSIDE-OF-DECK ELEVATION = (133' - 6 3/4") AT THE THIRD FLOOR LEVEL, IN THE AREA BOUNDED BY GRIDS (AA) - (AA.8) AND (B) - (13). UNLESS NOTED OTHERWISE AS (X' - X"), (+/-X' - X"), OR HI/LO. SS-S-1 73

2.) TYPICAL UNDERSIDE-OF-DECK ELEVATION = (135' - 10") AT THE THIRD FLOOR LEVEL, IN THE AREA BOUNDED BY GRIDS (DD) - (QQ) AND (20) - (22). UNLESS NOTED OTHERWISE AS (X' - X"), (+/-X' - X"), OR HI/LO.

3.) TYPICAL UNDERSIDE-OF-DECK ELEVATION = (136' - 4") ALONG THE PERIMETER OF THE MULTI-PURPOSE ROOM ROOF LEVEL, IN THE AREA BOUNDED BY GRIDS (DD) - (PP) AND (11) - (20). UNLESS NOTED OTHERWISE AS (X' - X"), (+/-X' - X"), OR HI/LO.

4.) FRAMING ELEVATIONS ARE BASED ON TOP-OF-FLOOR ELEVATION = (134' - 0"), SHOWN ON THE ARCHITECTURAL DRAWINGS.

5.) COORDINATE ALL ELEVATIONS WITH ARCHITECTURAL DRAWINGS.

6.) SLOPE STEEL UNIFORMLY TO COLUMN ELEVATIONS SHOWN ON PLANS.

BRACE FRAME KEY

0" TYP	WF / BF-X	INDICATES A BRACE FRAME ABOVE AND BELOW LEVEL
0" TYP	BF-X / WF	INDICATES A BRACE FRAME ABOVE LEVEL
0" TYP	WF / BF-X	INDICATES A BRACE FRAME BELOW LEVEL

DRA

Drummey Rosane Anderson, Inc.

225 Oakland Road
Studio 205
South Windsor, CT
06074

260 Charles Street
Studio 300
Waltham, MA
02453

Planning | Architecture | Interior Design

Tel: 617.964.1700
www.draiwa.com

NORTHEAST METRO TECH

100 Hemlock Rd,
Wakefield, MA 01880

EDG

Engineers Design Group Inc.
Structural Engineers
389 Main Street, Suite 401
Malden, MA 02148
(781)396-9007
EDG@EDGINC.COM

REVISION LIST

SS-S-1	4/14/2023	STRUCTURAL STEEL ADDENDUM 1
SS-S-2	4/21/2023	STRUCTURAL STEEL ADDENDUM 2

FOR REFERENCE ONLY
SCOPE OF WORK ON THIS DRAWING IS A PART OF EARLY STRUCTURAL BID PACKAGE

© COPYRIGHT 2021 DRUMMEY ROSANE ANDERSON, INC.

MSBA 90% CD SUBMISSION

MAY 12, 2023

KEY PLAN

PROJECT NORTH

MAGNETIC NORTH

THIRD FLOOR FRAMING PLAN - AREA C

Scale: 1/8" = 1'-0"

Job No.: 20202

Drawn By: EDG

Date: MAY 12, 2023

S1-1-3C

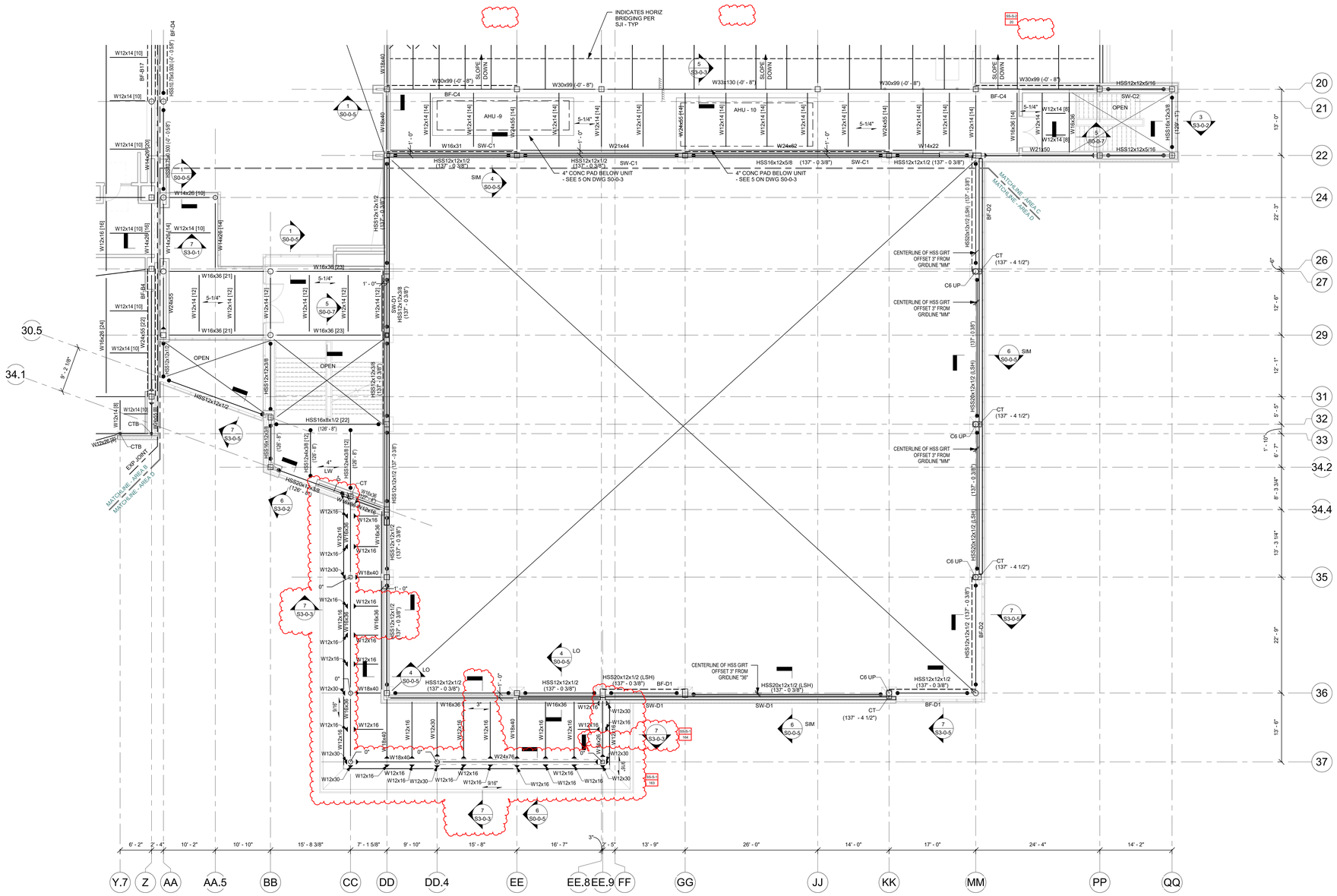

FIREPROOFING NOTES:

1. STEEL COLUMNS SHOWN ON THIS DRAWING SHALL RECEIVE 2-HOUR FIRE RATING BY CEMENTITIOUS FIREPROOFING UNLESS INDICATED AS A ROUND HSS COLUMN. EXPOSED TO VIEW PORTION OF ROUND HSS COLUMNS SHALL RECEIVE 2-HOUR FIRE RATING BY INTUMESCENT MASTIC FIREPROOFING. CONCEALED FROM VIEW PORTION OF ROUND HSS COLUMN SHALL RECEIVE 2-HOUR FIRE RATING BY CEMENTITIOUS FIREPROOFING.
2. STEEL BEAMS AND KICKERS SHOWN ON THIS DRAWING, SUPPORTING UPPER LEVEL FLOORS SHALL RECEIVE 2-HOUR RATING BY CEMENTITIOUS FIREPROOFING.
3. STEEL BEAMS AND KICKERS SHOWN ON THIS DRAWING, SUPPORTING ROOF SHALL RECEIVE 1-HOUR RATING BY CEMENTITIOUS FIREPROOFING. METAL ROOF DECK TO RECEIVE 1-HOUR FIRE RATING BY CEMENTITIOUS FIREPROOFING.
4. CONCEALED FROM VIEW BRACED FRAMES AND HORIZONTAL HSS GIRTS SHALL RECEIVE 2-HOUR FIRE RATING BY CEMENTITIOUS FIREPROOFING .
5. EXPOSED TO VIEW BRACED FRAMES AND HORIZONTAL HSS GIRTS SHALL RECEIVE 2-HOUR FIRE RATING BY INTUMENCENT MASTIC FIREPROOFING.
6. AT STAIRS 3 AND 6, ALL EXPOSED TO VIEW BEAMS AND HSS TUBES SUPPORTING STAIR LANDINGS AND STRINGERS SHALL RECEIVE 2-HOUR RATING BY INTUMESCENT MASTIC FIREPROOFING. NO FIREPROOFING REQUIRED AT SUPPLEMENTAL HSS TUBES SUPPORTING ONLY CURTAINWALL.
7. EXPOSED TO VIEW HORIZONTAL HSS TUBES IN GYMNASIUM AND SUPPORTING CURTAINWALL CW2 SHALL RECEIVE 2-HOUR RATING BY INTUMESCENT MASTIC FIREPROOFING.
8. COORDINATE FIREPROOFING REQUIREMENTS WITH THE SPECIFICATIONS AND ARCHITECTURAL DRAWINGS.

FRAMING ELEVATION NOTES:

1.) TYPICAL UNDERSIDE-OF-DECK ELEVATION = (133' - 6 3/4") AT THE THIRD FLOOR LEVEL, IN THE AREA BOUNDED BY GRIDS (AA) - (DD) AND (24) - (34.4). UNLESS NOTED OTHERWISE AS (X' - X"), (+/-X' - X"), OR HI/LO.

2.) TYPICAL UNDERSIDE-OF-DECK ELEVATION = (129 - 0") AT THE LOW ROOF LEVEL, IN THE AREA BOUNDED BY GRIDS (CC) - (FF) AND (34.4) - (37). UNLESS NOTED OTHERWISE AS (X' - X"), (+/-X' - X"), OR HI/LO.

3.) FRAMING ELEVATIONS ARE BASED ON TOP-OF-FLOOR ELEVATION = (134' - 0"), SHOWN ON THE ARCHITECTURAL DRAWINGS.

4.) COORDINATE ALL ELEVATIONS WITH ARCHITECTURAL DRAWINGS.

5.) SLOPE STEEL UNIFORMLY TO COLUMN ELEVATIONS SHOWN ON PLANS.

BRACE FRAME KEY

0" TYP. WF BF-X	INDICATES A BRACE FRAME ABOVE AND BELOW LEVEL
0" TYP. BF-X WF	INDICATES A BRACE FRAME ABOVE LEVEL
0" TYP. WF BF-X	INDICATES A BRACE FRAME BELOW LEVEL

DRA

Drummey Rosane Anderson, Inc.

225 Oakland Road
Studio 205
South Windsor, CT
06074

260 Charles Street
Studio 300
Waltham, MA
02453

Planning | Architecture | Interior Design

Tel: 617.964.1700
www.draiwa.com

NORTHEAST METRO TECH

100 Hemlock Rd,
Wakefield, MA 01880

EDG
Engineers Design Group Inc.
Structural Engineers
389 Main Street, Suite 401
Malden, MA 02148
(781)396-9007
EDG@EDGINC.COM

REVISION LIST

SS-S-1	4/14/2023	STRUCTURAL STEEL ADDENDUM 1
SS-S-2	4/21/2023	STRUCTURAL STEEL ADDENDUM 2

FOR REFERENCE ONLY
SCOPE OF WORK ON THIS DRAWING IS A PART OF EARLY STRUCTURAL BID PACKAGE

© COPYRIGHT 2021 DRUMMEY ROSANE ANDERSON, INC.

MSBA 90% CD SUBMISSION

MAY 12, 2023

KEY PLAN

PROJECT NORTH

MAGNETIC NORTH

THIRD FLOOR FRAMING PLAN - AREA D

Scale: 1/8" = 1'-0"
Job No.: 20202
Drawn By: EDG
Date: MAY 12, 2023

S1-1-3D

FIREPROOFING NOTES:

1. STEEL COLUMNS, SHOWN ON THIS DRAWING, SHALL RECEIVE 2-HOUR FIRE RATING BY CEMENTITIOUS FIREPROOFING UNLESS INDICATED AS A ROUND HSS COLUMN. EXPOSED TO VIEW PORTION OF ROUND HSS COLUMNS SHALL RECEIVE 2-HOUR FIRE RATING BY INTUMESCENT MASTIC FIREPROOFING. CONCEALED FROM VIEW PORTION OF ROUND HSS COLUMN SHALL RECEIVE 2-HOUR FIRE RATING BY CEMENTITIOUS FIREPROOFING.
2. STEEL BEAMS AND KICKERS SHOWN ON THIS DRAWING, SUPPORTING UPPER LEVEL FLOORS SHALL RECEIVE 2-HOUR RATING BY CEMENTITIOUS FIREPROOFING.
3. STEEL BEAMS AND KICKERS SHOWN ON THIS DRAWING, SUPPORTING ROOF SHALL RECEIVE 1-HOUR RATING BY CEMENTITIOUS FIREPROOFING. METAL ROOF DECK TO RECEIVE 1-HOUR FIRE RATING BY CEMENTITIOUS FIREPROOFING.
4. CONCEALED FROM VIEW BRACED FRAMES SHALL RECEIVE 2-HOUR FIRE RATING BY CEMENTITIOUS FIREPROOFING .
5. EXPOSED TO VIEW BRACED FRAMES SHALL RECEIVE 2-HOUR FIRE RATING BY INTUMENCENT MASTIC FIREPROOFING.
6. AT STAIRS 1 AND 2, EXPOSED TO VIEW HORIZONTAL HSS TUBES SHALL RECEIVE 2-HOUR RATING BY INTUMESCENT MASTIC FIREPROOFING.
7. NO FIREPROOFING REQUIRED AT SUPPLIMENTAL STEEL HSS GIRTS, AND OUTRIGGERS SUPPORTING CURTAINWALL IN THE LIBRARY ROTUNDA.
8. COORDINATE FIREPROOFING REQUIREMENTS WITH THE SPECIFICATIONS AND ARCHITECTURAL DRAWINGS.

FRAMING ELEVATION NOTES:

1.) TYPICAL UNDERSIDE-OF-DECK ELEVATION = (147' - 6 3/4") AT THE FOURTH FLOOR LEVEL, IN THE AREA BOUNDED BY GRIDS (H) - (S) AND (4) - (33). UNLESS NOTED OTHERWISE AS (X' - X"), (+/-X' - X"), OR HI/LO.

2.) TYPICAL UNDERSIDE-OF-DECK ELEVATION = (147' - 6 3/4") AT THE MEDIA CENTER ROOF LEVEL, IN THE AREA BOUNDED BY GRID (Rc2).

3.) FRAMING ELEVATIONS ARE BASED ON TOP-OF-FLOOR ELEVATION = (148' - 0"), SHOWN ON THE ARCHITECTURAL DRAWINGS.

4.) COORDINATE ALL ELEVATIONS WITH ARCHITECTURAL DRAWINGS.

5.) SLOPE STEEL UNIFORMLY TO COLUMN ELEVATIONS SHOWN ON PLANS.

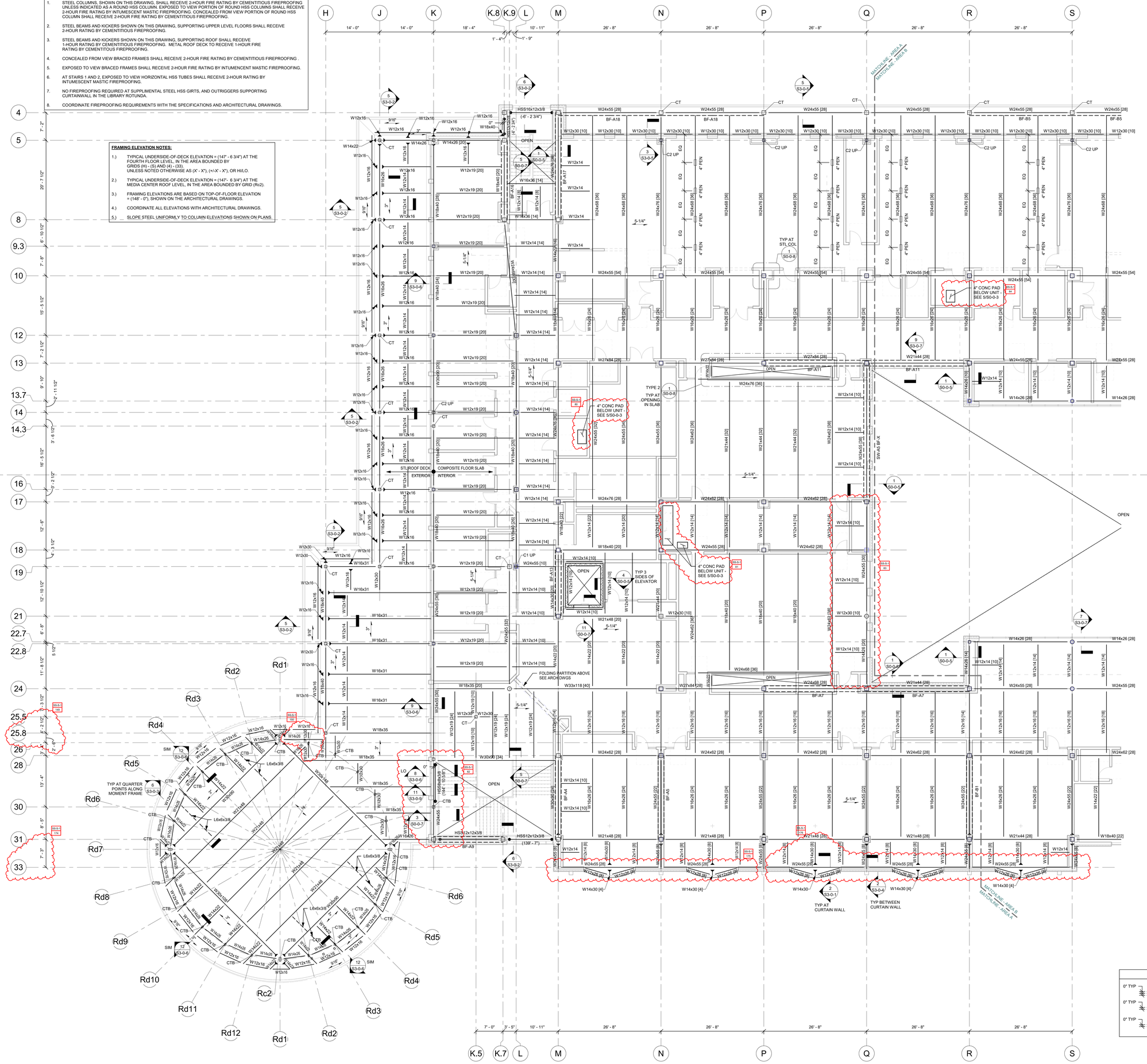

BRACE FRAME KEY

0" TYP WF BF-X	INDICATES A BRACE FRAME ABOVE AND BELOW LEVEL
0" TYP BF-X WF	INDICATES A BRACE FRAME ABOVE LEVEL
0" TYP WF BF-X	INDICATES A BRACE FRAME BELOW LEVEL

DRA
Drummey Rosane Anderson, Inc.
225 Oakland Road Studio 205 South Windsor, CT 06074
260 Charles Street Studio 300 Waltham, MA 02453
Planning | Architecture | Interior Design
Tel: 617.964.1700
www.draiwa.com

NORTHEAST METRO TECH

100 Hemlock Rd,
Wakefield, MA 01880

EDG
Engineers Design Group Inc.
Structural Engineers
389 Main Street, Suite 401
Malden, MA 02148
(781)396-9007
EDG@EDGINC.COM

REVISION LIST

SS-S-1	4/14/2023	STRUCTURAL STEEL ADDENDUM 1

© COPYRIGHT 2021 DRUMMEY ROSANE ANDERSON, INC.

FOR REFERENCE ONLY
SCOPE OF WORK ON THIS DRAWING IS A PART OF EARLY STRUCTURAL BID PACKAGE

MSBA 90% CD SUBMISSION

MAY 12, 2023

KEY PLAN

PROJECT NORTH | MAGNETIC NORTH

FOURTH FLOOR FRAMING PLAN - AREA A

Scale: 1/8" = 1'-0"
Job No.: 20202
Drawn By: EDG
Date: MAY 12, 2023

S1-1-4A

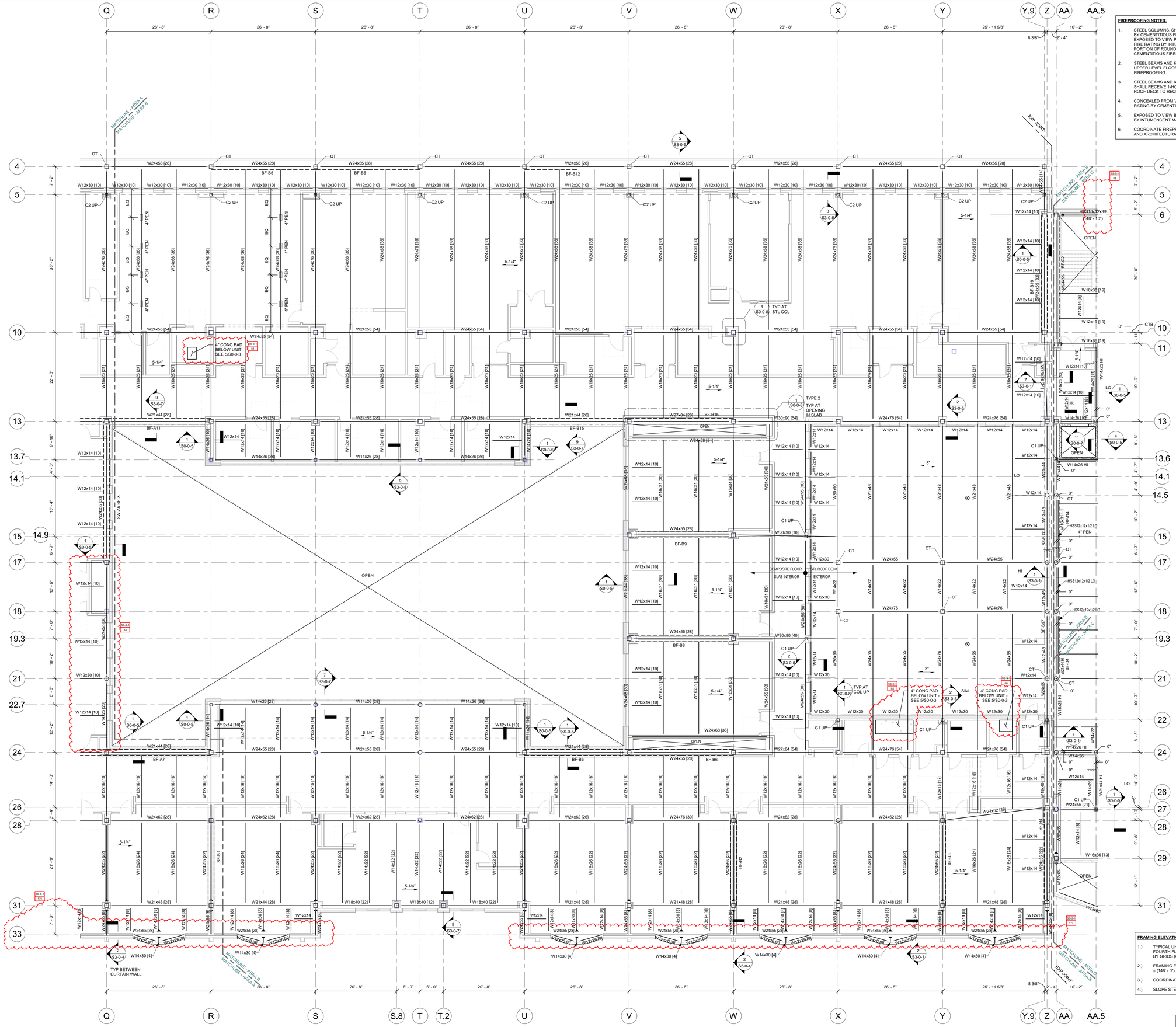

FIREPROOFING NOTES:

1. STEEL COLUMNS, SHOWN ON THIS DRAWING, SHALL RECEIVE 2-HOUR FIRE RATING BY CEMENTITIOUS FIREPROOFING UNLESS INDICATED AS A ROUND HSS COLUMN. EXPOSED TO VIEW PORTION OF ROUND HSS COLUMNS SHALL RECEIVE 2-HOUR FIRE RATING BY INTUMESCENT MASTIC FIREPROOFING. CONCEALED FROM VIEW PORTION OF ROUND HSS COLUMN SHALL RECEIVE 2-HOUR FIRE RATING BY CEMENTITIOUS FIREPROOFING.
2. STEEL BEAMS AND KICKERS SHOWN ON THIS DRAWING, SUPPORTING UPPER LEVEL FLOORS SHALL RECEIVE 2-HOUR RATING BY CEMENTITIOUS FIREPROOFING.
3. STEEL BEAMS AND KICKERS SHOWN ON THIS DRAWING, SUPPORTING ROOF SHALL RECEIVE 1-HOUR RATING BY CEMENTITIOUS FIREPROOFING. METAL ROOF DECK TO RECEIVE 1-HOUR FIRE RATING BY CEMENTITOUS FIREPROOFING.
4. CONCEALED FROM VIEW BRACED FRAMES SHALL RECEIVE 2-HOUR FIRE RATING BY CEMENTITIOUS FIREPROOFING .
5. EXPOSED TO VIEW BRACED FRAMES SHALL RECEIVE 2-HOUR FIRE RATING BY INTUMENCENT MASTIC FIREPROOFING.
6. COORDINATE FIREPROOFING REQUIREMENTS WITH THE SPECIFICATIONS AND ARCHITECTURAL DRAWINGS.

FRAMING ELEVATION NOTES:

1.) TYPICAL UNDERSIDE-OF-DECK ELEVATION = (147' - 6 3/4") AT THE FOURTH FLOOR LEVEL, IN THE AREA BOUNDED BY GRIDS (Q) - (Z) AND (4) - (33).

2.) FRAMING ELEVATIONS ARE BASED ON TOP-OF-FLOOR ELEVATION = (148' - 0"), SHOWN ON THE ARCHITECTURAL DRAWINGS.

3.) COORDINATE ALL ELEVATIONS WITH ARCHITECTURAL DRAWINGS.

4.) SLOPE STEEL UNIFORMLY TO COLUMN ELEVATIONS SHOWN ON PLANS.

BRACE FRAME KEY

0" TYP WF BF-X	INDICATES A BRACE FRAME ABOVE AND BELOW LEVEL
0" TYP BF-X WF	INDICATES A BRACE FRAME ABOVE LEVEL
0" TYP WF BF-X	INDICATES A BRACE FRAME BELOW LEVEL

DRA

Drummey Rosane Anderson, Inc.

225 Oakland Road
Studio 205
South Windsor, CT
06074

260 Charles Street
Studio 300
Waltham, MA
02453

Planning | Architecture | Interior Design

Tel: 617.964.1700
www.draiwa.com

NORTHEAST METRO TECH

100 Hemlock Rd,
Wakefield, MA 01880

EDG

Engineers Design Group Inc.
Structural Engineers
389 Main Street, Suite 401
Malden, MA 02148
(781)396-9007
EDG@EDGINC.COM

REVISION LIST

SS-S-1	4/14/2023	STRUCTURAL STEEL ADDENDUM 1

© COPYRIGHT 2021 DRUMMEY ROSANE ANDERSON, INC.

FOR REFERENCE ONLY
SCOPE OF WORK ON THIS DRAWING IS A PART OF EARLY STRUCTURAL BID PACKAGE

MSBA 90% CD SUBMISSION

MAY 12, 2023

KEY PLAN

PROJECT NORTH

MAGNETIC NORTH

FOURTH FLOOR FRAMING PLAN - AREA B

Scale: 1/8" = 1'-0"
Job No.: 20202
Drawn By: EDG
Date: MAY 12, 2023

S1-1-4B

FIREPROOFING NOTES:

1. STEEL COLUMNS SHOWN ON THIS DRAWING SHALL RECEIVE 2-HOUR FIRE RATING BY CEMENTITIOUS FIREPROOFING UNLESS INDICATED AS A ROUND HSS COLUMN. EXPOSED TO VIEW PORTION OF ROUND HSS COLUMNS SHALL RECEIVE 2-HOUR FIRE RATING BY INTUMESCENT MASTIC FIREPROOFING. CONCEALED FROM VIEW PORTION OF ROUND HSS COLUMN SHALL RECEIVE 2-HOUR FIRE RATING BY CEMENTITIOUS FIREPROOFING
2. STEEL BEAMS AND KICKERS SHOWN ON THIS DRAWING, SUPPORTING UPPER LEVEL FLOORS SHALL RECEIVE 2-HOUR RATING BY CEMENTITIOUS FIREPROOFING.
3. STEEL BEAMS AND KICKERS SHOWN ON THIS DRAWING, SUPPORTING ROOF SHALL RECEIVE 1-HOUR RATING BY CEMENTITIOUS FIREPROOFING. METAL ROOF DECK TO RECEIVE 1-HOUR FIRE RATING BY CEMENTITOUS FIREPROOFING.
4. CONCEALED FROM VIEW BRACED FRAMES SHALL RECEIVE 2-HOUR FIRE RATING BY CEMENTITIOUS FIREPROOFING.
5. EXPOSED TO VIEW BRACED FRAMES SHALL RECEIVE 2-HOUR FIRE RATING BY INTUMENCENT MASTIC FIREPROOFING.
6. AT STAIRS 4 AND 7, ALL EXPOSED TO VIEW STRUCTURE SHALL RECEIVE 2-HOUR RATING BY INTUMESCENT MASTIC FIREPROOFING
7. COORDINATE FIREPROOFING REQUIREMENTS WITH THE SPECIFICATIONS AND ARCHITECTURAL DRAWINGS.

FRAMING NOTES:

1.) FOR GENERAL NOTES AND TYPICAL DETAILS SEE DRAWINGS S0-0-1, S0-0-2, S0-0-3, S0-0-4, S0-0-5 , S0-0-6, S0-0-7 AND S0-0-8.

2.) REFER TO ARCHITECTURAL DRAWINGS FOR ELEVATIONS AND VERTICAL DIMENSIONS. PITCH ALL STEEL UNIFORMLY TO LOW POINTS AT THE COLUMNS AND BENT BEAMS AS SHOWN ON THE ARCHITECTURAL DRAWINGS.

3.) BF-1 ETC... INDICATES A BRACED BAY. REFER TO BRACED FRAME ELEVATIONS AND DETAILS ON DRAWINGS S4-0-1, S4-0-2, S4-0-3, S4-0-4, S4-0-5, S4-0-6, S4-0-7 AND S4-0-8 FOR ADDITIONAL INFORMATION.

4.) [XX] INDICATES THE NUMBER OF 3/4" DIAMETER x 4 1/4" LONG HEADED STUDS WELDED TO THE TOP FLANGE OF THE BEAM. SPACE STUDS EVENLY ALONG THE BEAM UNLESS NOTED OTHERWISE.

5.) INDICATES A MOMENT CONNECTION TO DEVELOP THE FULL CAPACITY OF THE MEMBER. REFER TO TYPICAL DETAILS 7, 8 AND 9 ON DRAWING S0-0-6.

6.) INDICATES A 5/16" FILLET WELD ALL AROUND. (HSS BEAM TO HSS COLUMN) WHERE BEAM DIMENSIONS EXCEED COLUMN DIMENSIONS PROVIDE 1/2" THICK STEEL CAP PLATE TO ACHIEVE ALL AROUND WELD. REFER TO TYPICAL DETAIL 2 ON DRAWING S0-0-7.

7.) < X" > INDICATES UPWARD CAMBER AT THE MID-SPAN OF THE MEMBER.

8.) 5-1/4" INDICATES SPAN DIRECTION OF 2" DEEP, 20 GAGE GALVANIZED COMPOSITE STEEL DECK WITH 3 1/4" LIGHT WEIGHT CONCRETE TOPPING. TOTAL THICKNESS = 5 1/4". REINFORCE WITH 6x6 - W2.1xW2.1 WWR.

9.) 1 1/2" INDICATES SPAN DIRECTION OF 1 1/2" DEEP, 20 GAGE TYPE B, GALVANIZED STEEL ROOF DECK.

10.) NA INDICATES SPAN DIRECTION OF 3" DEEP, 20 GAGE TYPE NA, GALVANIZED ACOUSTIC STEEL ROOF DECK. SS-S-2 F1

11.) LW INDICATES SPAN DIRECTION OF 1 1/2" DEEP, 20 GAGE GALVANIZED COMPOSITE STEEL DECK WITH 2 1/2" LIGHT WEIGHT CONCRETE TOPPING. TOTAL THICKNESS = 4". REINFORCE WITH 6x6 - W2.1xW2.1 WWR.

12.) FOR EXACT NUMBER, SIZE, AND LOCATION OF OPENING IN STEEL DECKING REFER TO MECHANICAL AND ARCHITECTURAL DRAWINGS. FOR FRAMING INFORMATION. REFER TO DETAILS 1, 2 AND 3 ON DRAWING S0-0-8.

13.) 6" HATCHED AREA INDICATES LOCATION OF CONCRETE SLAB WITH 3" DEEP, 18 GAGE GALVANIZED COMPOSITE STEEL DECK WITH 4" NORMAL WEIGHT CONCRETE TOPPING. TOTAL THICKNESS = 6". REINFORCE WITH 6x6 - W2.1xW2.1 WWR. REFER TO TYPICAL DETAIL 5 ON DRAWING S0.07 FOR ADDITIONAL INFORMATION. USE 3/4" DIA x 5" LONG HEADED STUDS.

14.) ⊗ INDICATES A ROOF DRAIN. REFER TO TYPICAL STRUCTURAL DETAILS 1 AND 2 ON DRAWING S0-0-8 AND DETAIL 1 ON DRAWING S0-0-8. FOR DECKING SUPPORT, REFER TO DETAIL 6 ON DRAWING S0-0-7. REFER TO PLUMBING AND ARCHITECTURAL DRAWINGS FOR OPENING SIZES AND LOCATIONS.

15.) CT INDICATES A COLUMN TERMINATES AT THIS LEVEL.

16.) WF INDICATES A BEND IN THE STEEL BEAM. REFER TO TYPICAL DETAIL 9 ON DRAWING S0-0-7.

17.) OR INDICATES A CMU WALL. REFER TO TYPICAL DETAIL 8 ON DRAWING S0-0-4 FOR REINFORCEMENT. DETAIL 6 ON DRAWING S0-0-5 FOR CONNECTION OF SHEAR WALLS TO BEAMS AND COLUMNS, AND DETAIL 7 ON DRAWING S0-0-5 FOR CONNECTIONS TO STEEL BEAMS AND CONCRETE SLABS AT THE TOP OF WALL FOR NON-STRUCTURAL WALLS. REFER TO RELEVANT SECTIONS FOR CONNECTIONS OF SHEAR WALLS TO THE STRUCTURE.

18.) 8" + 2" PC PLANK INDICATES SPAN OF 8" DEEP PRESTRESSED, PRECAST CONCRETE HOLLOW CORE PLANK WITH A MINIMUM 2" OF NORMAL WEIGHT CONCRETE TOPPING. PLANK AND CONCRETE TOPPING SLAB TO BE DESIGNED TO SUPPORT A MINIMUM LIVE LOAD CAPACITY OF 150 PSF. PRECAST CONCRETE PLANK TO BE DESIGNED FOR MINIMUM OF 2 HOUR FIRE RATING.

19.) 10" + 2" PC PLANK INDICATES SPAN OF 10" DEEP PRESTRESSED, PRECAST CONCRETE HOLLOW CORE PLANK WITH A MINIMUM 2" OF NORMAL WEIGHT CONCRETE TOPPING. PLANK AND CONCRETE TOPPING SLAB TO BE DESIGNED TO SUPPORT A MINIMUM LIVE LOAD CAPACITY OF 150 PSF. PRECAST CONCRETE PLANK TO BE DESIGNED FOR MINIMUM OF 2 HOUR FIRE RATING

20.) FOR DIMENSIONS AND ELEVATIONS NOT GIVEN REFER TO ARCHITECTURAL DRAWINGS.

21.) WF INDICATES A SPLICE CONNECTION ALONG A CONTINUOUS STEEL BEAM. DESIGN SPLICE CONNECTION FOR FULL CAPACITY OF STEEL BEAM.

22.) INDICATES A SLAB DEPRESSION. REFER TO DETAILS 1 ON DRAWING S0-0-6.

23.) 9/16" INDICATES SPAN DIRECTION OF 9/16" DEEP, 20 GAGE GALVANIZED STEEL ROOF DECK.

24.) XX"X"XX" INDICATES OPENING IN WEB OF STEEL BEAM FOR MECH/ ELECT/PLUMB/ FIRE PROTECT/ ETC COORDINATE WITH APPLICABLE DRAWING FOR OPENING SIZE. SEE TYPICAL DETAIL 5 AND 6 ON S0-0-6 FOR ADDITIONAL INFORMATION.

25.) 3" INDICATES SPAN DIRECTION OF 3" DEEP, 20 GAGE TYPE N, GALVANIZED STEEL ROOF DECK. SS-S-2 F2

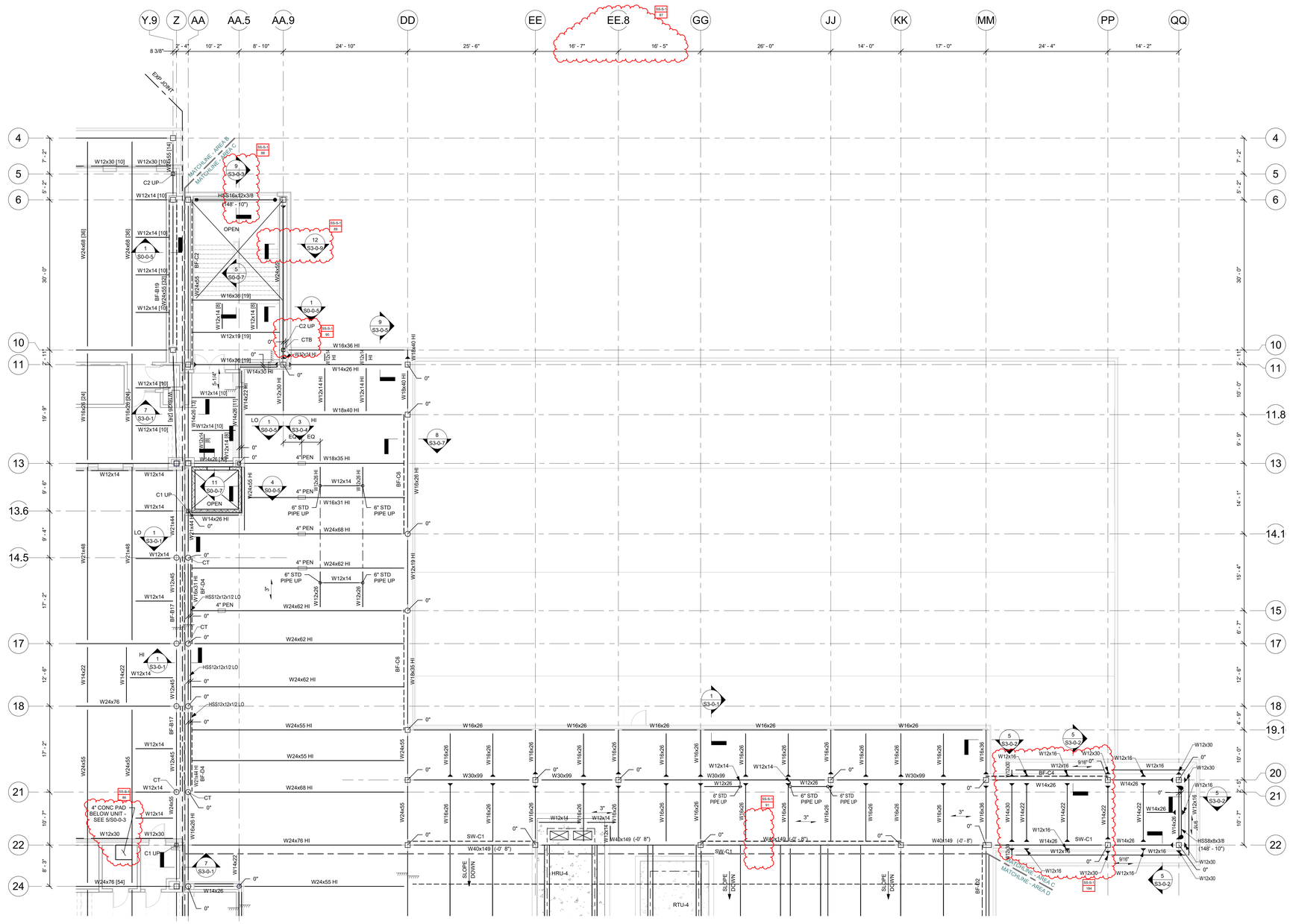

FRAMING ELEVATION NOTES:

1.) TYPICAL UNDERSIDE-OF-DECK ELEVATION = (147' -6 3/4") AT THE FOURTH FLOOR LEVEL, IN THE AREA BOUNDED BY GRIDS (AA) - (AA.9) AND (6) - (13). UNLESS NOTED OTHERWISE AS (X' - X"), (+/-X' - X"), OR HI/LO.

2.) TYPICAL UNDERSIDE-OF-DECK ELEVATION = (152 - 4") AT THE CLEAR-STORY ROOF LEVEL, IN THE AREA BOUNDED BY GRIDS (AA) - (DD) AND (10) - (22). UNLESS NOTED OTHERWISE AS (X' - X"), (+/-X' - X"), OR HI/LO.

3.) FRAMING ELEVATIONS ARE BASED ON TOP-OF-FLOOR ELEVATION = (148' - 0"), SHOWN ON THE ARCHITECTURAL DRAWINGS.

4.) COORDINATE ALL ELEVATIONS WITH ARCHITECTURAL DRAWINGS.

5.) SLOPE STEEL UNIFORMLY TO COLUMN ELEVATIONS SHOWN ON PLANS.

BRACE FRAME KEY

0" TYP	WF BF-X	INDICATES A BRACE FRAME ABOVE AND BELOW LEVEL
0" TYP	BF-X WF	INDICATES A BRACE FRAME ABOVE LEVEL
0" TYP	WF BF-X	INDICATES A BRACE FRAME BELOW LEVEL

DRA

Drummey Rosane Anderson, Inc.

225 Oakland Road
Studio 205
South Windsor, CT
06074

260 Charles Street
Studio 300
Waltham, MA
02453

Planning | Architecture | Interior Design

Tel: 617-964-1700
www.draiwa.com

NORTHEAST METRO TECH

100 Hemlock Rd,
Wakefield, MA 01880

EDG
Engineers Design Group Inc.
Structural Engineers
389 Main Street, Suite 401
Malden, MA 02148
(781)396-9007
EDG@EDGINC.COM

REVISION LIST

SS-S-1	4/14/2023	STRUCTURAL STEEL ADDENDUM 1
SS-S-2	4/21/2023	STRUCTURAL STEEL ADDENDUM 2

FOR REFERENCE ONLY
SCOPE OF WORK ON THIS DRAWING IS A PART OF EARLY STRUCTURAL BID PACKAGE

© COPYRIGHT 2021 DRUMMEY ROSANE ANDERSON, INC.

MSBA 90% CD SUBMISSION

MAY 12, 2023

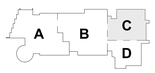

KEY PLAN

PROJECT NORTH | MAGNETIC NORTH

FOURTH FLOOR FRAMING PLAN - AREA C

Scale: 1/8" = 1'-0"
Job No.: 20202
Drawn By: EDG
Date: MAY 12, 2023

S1-1-4C

FIREPROOFING NOTES:

1. STEEL COLUMNS SHOWN ON THIS DRAWING SHALL RECEIVE 2-HOUR FIRE RATING BY CEMENTITIOUS FIREPROOFING UNLESS INDICATED AS A ROUND HSS COLUMN. EXPOSED TO VIEW PORTION OF ROUND HSS COLUMNS SHALL RECEIVE 2-HOUR FIRE RATING BY INTUMESCENT MASTIC FIREPROOFING. CONCEALED FROM VIEW PORTION OF ROUND HSS COLUMN SHALL RECEIVE 2-HOUR FIRE RATING BY CEMENTITIOUS FIREPROOFING.
2. IN GYMNASIUM JOISTS ALONG GRIDS EE, GG, AND KK SHALL RECEIVE 1-HOUR FIRE RATING BY INTUMESCENT MASTIC FIREPROOFING.
3. STEEL BEAMS AND KICKERS SHOWN ON THIS DRAWING, SUPPORTING UPPER LEVEL FLOORS SHALL RECEIVE 2-HOUR RATING BY CEMENTITIOUS FIREPROOFING.
4. STEEL BEAMS AND KICKERS SHOWN ON THIS DRAWING, SUPPORTING ROOF SHALL RECEIVE 1-HOUR RATING BY CEMENTITIOUS FIREPROOFING. METAL ROOF DECK TO RECEIVE 1-HOUR FIRE RATING BY CEMENTITOUS FIREPROOFING.
5. CONCEALED FROM VIEW BRACED FRAMES AND HORIZONTAL HSS GIRTS SHALL RECEIVE 2-HOUR FIRE RATING BY CEMENTITIOUS FIREPROOFING .
6. EXPOSED TO VIEW BRACED FRAMES AND HORIZONTAL HSS GIRTS SHALL RECEIVE 2-HOUR FIRE RATING BY INTUMENCENT MASTIC FIREPROOFING.
7. AT STAIRS 3 AND 6, ALL EXPOSED TO VIEW STRUCTURE SHALL RECEIVE 2-HOUR RATING BY INTUMESCENT MASTIC FIREPROOFING
8. EXPOSED TO VIEW HORIZONTAL HSS TUBES IN GYMNASIUM AND SUPPORTING CURTAINWALL CW2 SHALL RECEIVE 2-HOUR RATING BY INTUMESCENT MASTIC FIREPROOFING.
9. COORDINATE FIREPROOFING REQUIREMENTS WITH THE SPECIFICATIONS AND ARCHITECTURAL DRAWINGS.

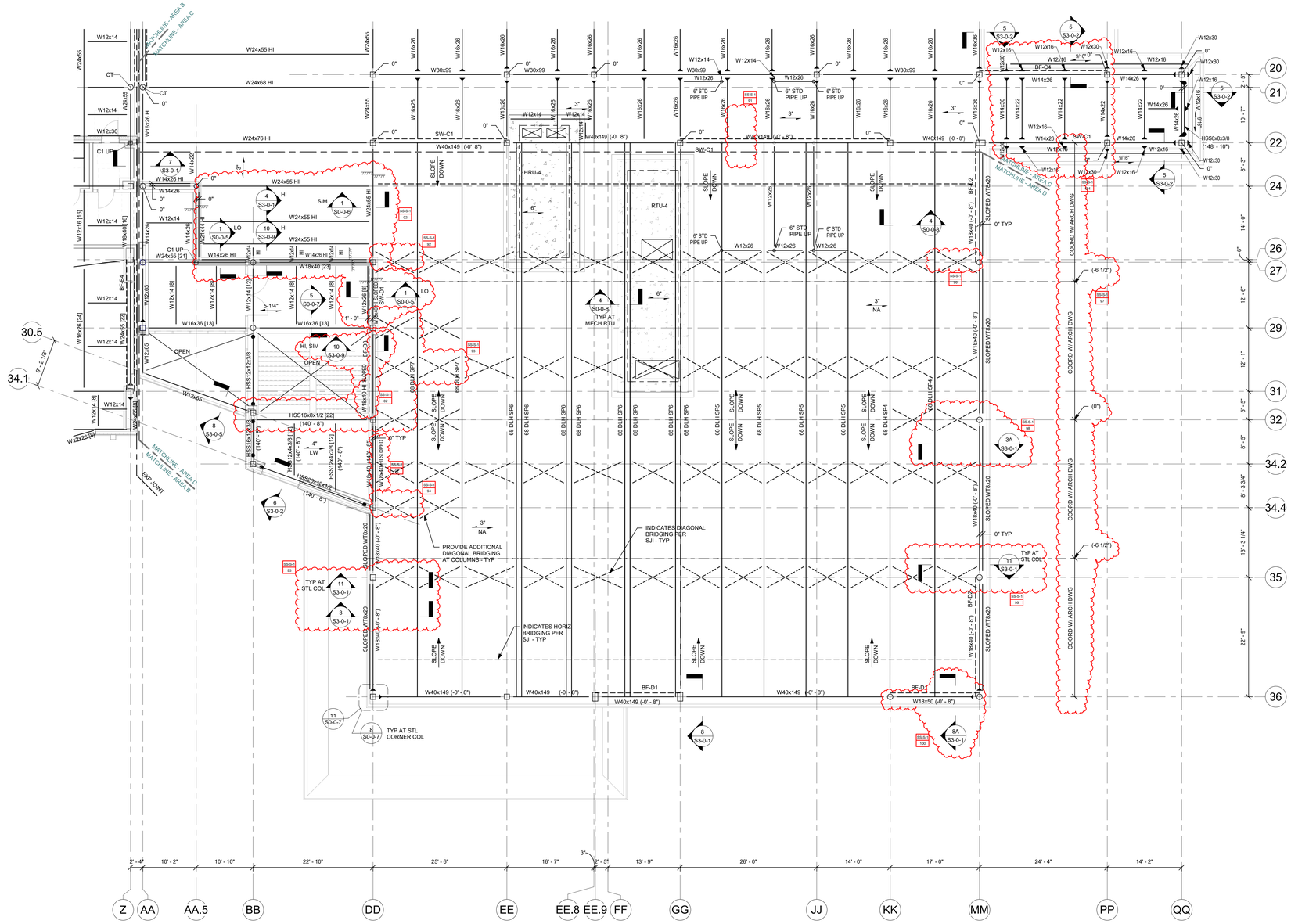

FRAMING ELEVATION NOTES:

1.) TYPICAL UNDERSIDE-OF-DECK ELEVATION = (147' - 6 3/4") AT THE FOURTH FLOOR LEVEL, IN THE AREA BOUNDED BY GRIDS (AA) - (DD) AND (24) - (34.4). UNLESS NOTED OTHERWISE AS (X' - X"), (+/-X' - X"), OR HI/LO.

2.) TYPICAL UNDERSIDE-OF-DECK ELEVATION = (152' - 4") ALONG THE PERIMETER OF THE GYM ROOF LEVEL, IN THE AREA BOUNDED BY GRIDS (DD) - (MM) AND (22) - (36). UNLESS NOTED OTHERWISE AS (X' - X"), (+/-X' - X"), OR HI/LO.

3.) FRAMING ELEVATIONS ARE BASED ON TOP-OF-FLOOR ELEVATION = (148' - 0"), SHOWN ON THE ARCHITECTURAL DRAWINGS.

4.) COORDINATE ALL ELEVATIONS WITH ARCHITECTURAL DRAWINGS.

5.) SLOPE STEEL UNIFORMLY TO COLUMN ELEVATIONS SHOWN ON PLANS.

BRACE FRAME KEY

0" TYP	WF / BF-X	INDICATES A BRACE FRAME ABOVE AND BELOW LEVEL
0" TYP	BF-X / WF	INDICATES A BRACE FRAME ABOVE LEVEL
0" TYP	WF / BF-X	INDICATES A BRACE FRAME BELOW LEVEL

DRA

Drummey Rosane Anderson, Inc.

225 Oakland Road
Studio 205
South Windsor, CT
06074

260 Charles Street
Studio 300
Waltham, MA
02453

Planning | Architecture | Interior Design

Tel: 617.964.1700
www.draiwa.com

NORTHEAST METRO TECH

100 Hemlock Rd,
Wakefield, MA 01880

EDG
Engineers Design Group Inc.
Structural Engineers
389 Main Street, Suite 401
Malden, MA 02148
(781)396-9007
EDG@EDGINC.COM

REVISION LIST

SS-S-1	4/14/2023	STRUCTURAL STEEL ADDENDUM 1

FOR REFERENCE ONLY
SCOPE OF WORK ON THIS DRAWING IS A PART OF EARLY STRUCTURAL BID PACKAGE

© COPYRIGHT 2021 DRUMMEY ROSANE ANDERSON, INC.

MSBA 90% CD SUBMISSION

MAY 12, 2023

KEY PLAN

PROJECT NORTH | MAGNETIC NORTH

FOURTH FLOOR FRAMING PLAN - AREA D

Scale: 1/8" = 1'-0"
Job No.: 20202
Drawn By: EDG
Date: MAY 12, 2023

S1-1-4D

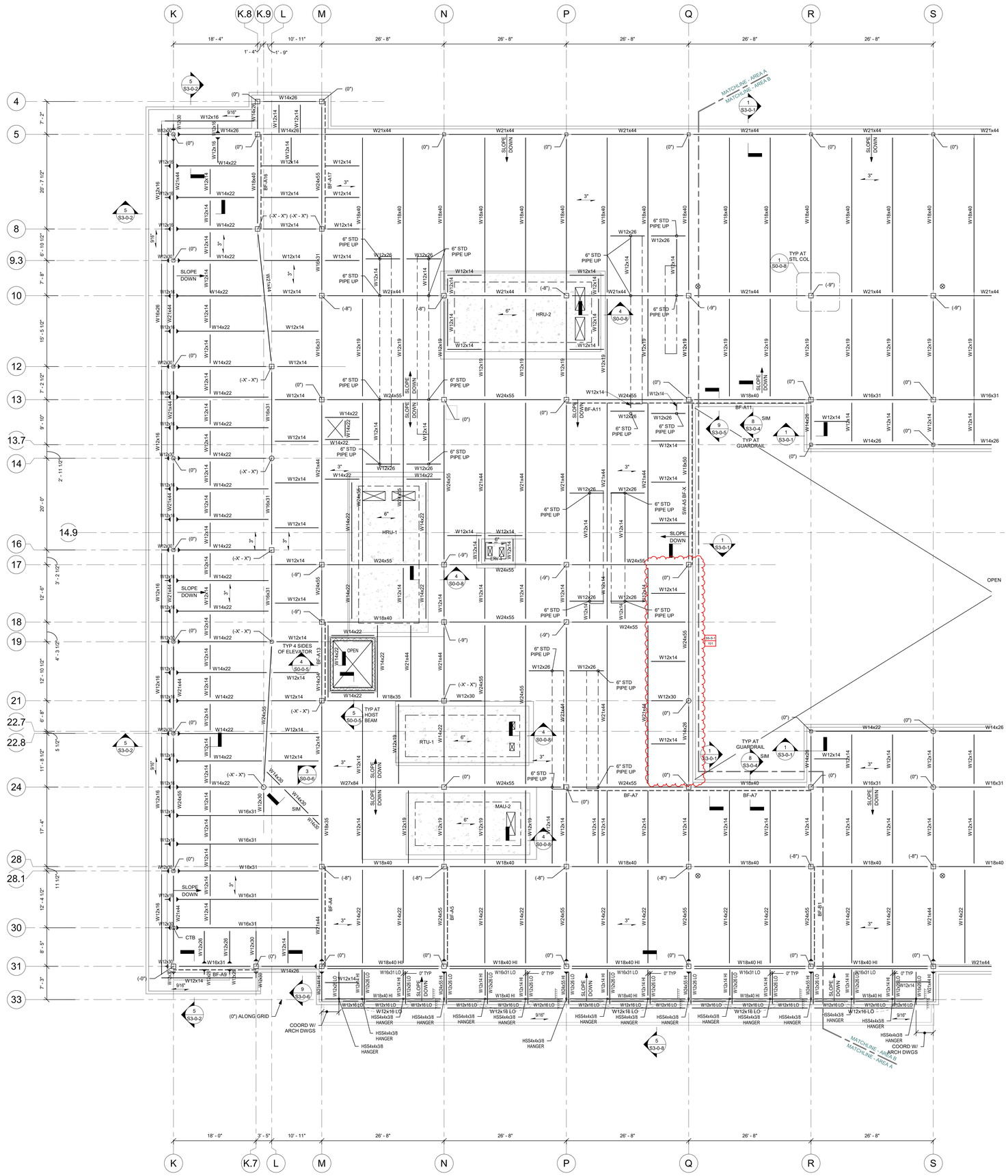

FIREPROOFING NOTES:

1. STEEL COLUMNS, SHOWN ON THIS DRAWING, SHALL RECEIVE 2-HOUR FIRE RATING BY CEMENTITIOUS FIREPROOFING UNLESS INDICATED AS A ROUND HSS COLUMN. EXPOSED TO VIEW PORTION OF ROUND HSS COLUMNS SHALL RECEIVE 2-HOUR FIRE RATING BY INTUMESCENT MASTIC FIREPROOFING. CONCEALED FROM VIEW PORTION OF ROUND HSS COLUMN SHALL RECEIVE 2-HOUR FIRE RATING BY CEMENTITIOUS FIREPROOFING.
2. STEEL BEAMS AND KICKERS SHOWN ON THIS DRAWING, SUPPORTING ROOF SHALL RECEIVE 1-HOUR RATING BY CEMENTITIOUS FIREPROOFING. METAL ROOF DECK TO RECEIVE 1-HOUR FIRE RATING BY CEMENTITOUS FIREPROOFING.
3. CONCEALED FROM VIEW BRACED FRAMES SHALL RECEIVE 2-HOUR FIRE RATING BY CEMENTITIOUS FIREPROOFING .
4. EXPOSED TO VIEW BRACED FRAMES SHALL RECEIVE 2-HOUR FIRE RATING BY INTUMENCENT MASTIC FIREPROOFING.
5. COORDINATE FIREPROOFING REQUIREMENTS WITH THE SPECIFICATIONS AND ARCHITECTURAL DRAWINGS.

FRAMING NOTES:

1.) FOR GENERAL NOTES AND TYPICAL DETAILS SEE DRAWINGS S0-0-1, S0-0-2, S0-0-3, S0-0-4, S0-0-5 , S0-0-6, S0-0-7 AND S0-0-8.

2.) REFER TO ARCHITECTURAL DRAWINGS FOR ELEVATIONS AND VERTICAL DIMENSIONS. PITCH ALL STEEL UNIFORMLY TO LOW POINTS AT THE COLUMNS AND BENT BEAMS AS SHOWN ON THE ARCHITECTURAL DRAWINGS.

3.) BF-1 ETC... INDICATES A BRACED BAY. REFER TO BRACED FRAME ELEVATIONS AND DETAILS ON DRAWINGS S4-0-1, S4-0-2, S4-0-3, S4-0-4, S4-0-5, S4-0-6, S4-0-7 AND S4-0-8 FOR ADDITIONAL INFORMATION.

4.) [XX] INDICATES THE NUMBER OF 3/4" DIAMETER x 4 1/4" LONG HEADED STUDS WELDED TO THE TOP FLANGE OF THE BEAM. SPACE STUDS EVENLY ALONG THE BEAM UNLESS NOTED OTHERWISE.

5.) INDICATES A MOMENT CONNECTION TO DEVELOP THE FULL CAPACITY OF THE MEMBER. REFER TO TYPICAL DETAILS 7, 8 AND 9 ON DRAWING S0-0-6.

6.) INDICATES A 5/16" FILLET WELD ALL AROUND. (HSS BEAM TO HSS COLUMN) WHERE BEAM DIMENSIONS EXCEED COLUMN DIMENSIONS PROVIDE 1/2" THICK STEEL CAP PLATE TO ACHIEVE ALL AROUND WELD. REFER TO TYPICAL DETAIL 2 ON DRAWING S0-0-7.

7.) < X" > INDICATES UPWARD CAMBER AT THE MID-SPAN OF THE MEMBER.

8.) 5-1/4" INDICATES SPAN DIRECTION OF 2" DEEP, 20 GAGE GALVANIZED COMPOSITE STEEL DECK WITH 3 1/4" LIGHT WEIGHT CONCRETE TOPPING. TOTAL THICKNESS = 5 1/4". REINFORCE WITH 6x6 - W2.1xW2.1 WWR.

9.) 1 1/2" INDICATES SPAN DIRECTION OF 1 1/2" DEEP, 20 GAGE TYPE B, GALVANIZED STEEL ROOF DECK.

10.) 3" NA INDICATES SPAN DIRECTION OF 3" DEEP, 20 GAGE TYPE NA, GALVANIZED ACOUSTIC STEEL ROOF DECK. SS-S-2 21

11.) 4" LW INDICATES SPAN DIRECTION OF 1 1/2" DEEP, 20 GAGE GALVANIZED COMPOSITE STEEL DECK WITH 2 1/2" LIGHT WEIGHT CONCRETE TOPPING. TOTAL THICKNESS = 4". REINFORCE WITH 6x6 - W2.1xW2.1 WWR.

12.) FOR EXACT NUMBER, SIZE, AND LOCATION OF OPENING IN STEEL DECKING REFER TO MECHANICAL AND ARCHITECTURAL DRAWINGS. FOR FRAMING INFORMATION, REFER TO DETAILS 1, 2 AND 3 ON DRAWING S0-0-8.

13.) 6" HATCHED AREA INDICATES LOCATION OF CONCRETE SLAB WITH 3" DEEP, 18 GAGE GALVANIZED COMPOSITE STEEL DECK WITH 4" NORMAL WEIGHT CONCRETE TOPPING. TOTAL THICKNESS = 6". REINFORCE WITH 6x6 - W2.1xW2.1 WWR. REFER TO TYPICAL DETAIL 5 ON DRAWING S0.07 FOR ADDITIONAL INFORMATION. USE 3/4" DIA x 5" LONG HEADED STUDS.

14.) INDICATES A ROOF DRAIN. REFER TO TYPICAL STRUCTURAL DETAILS 1 AND 2 ON DRAWING S0-0-8 AND DETAIL 1 ON DRAWING S0-0-8. FOR DECKING SUPPORT, REFER TO DETAIL 6 ON DRAWING S0-0-7. REFER TO PLUMBING AND ARCHITECTURAL DRAWINGS FOR OPENING SIZES AND LOCATIONS.

15.) CT INDICATES A COLUMN TERMINATES AT THIS LEVEL.

16.) WF INDICATES A BEND IN THE STEEL BEAM. REFER TO TYPICAL DETAIL 9 ON DRAWING S0-0-7.

17.) OR / OR INDICATES A CMU WALL. REFER TO TYPICAL DETAIL 8 ON DRAWING S0-0-4 FOR REINFORCEMENT, DETAIL 6 ON DRAWING S0-0-5 FOR CONNECTION OF SHEAR WALLS TO BEAMS AND COLUMNS, AND DETAIL 7 ON DRAWING S0-0-5 FOR CONNECTIONS TO STEEL BEAMS AND CONCRETE SLABS AT THE TOP OF WALL FOR NON-STRUCTURAL WALLS. REFER TO RELEVANT SECTIONS FOR CONNECTIONS OF SHEAR WALLS TO THE STRUCTURE.

18.) 8" + 2" PC PLANK INDICATES SPAN OF 8" DEEP PRESTRESSED, PRECAST CONCRETE HOLLOW CORE PLANK WITH A MINIMUM 2" OF NORMAL WEIGHT CONCRETE TOPPING. PLANK AND CONCRETE TOPPING SLAB TO BE DESIGNED TO SUPPORT A MINIMUM LIVE LOAD CAPACITY OF 150 PSF. PRECAST CONCRETE PLANK TO BE DESIGNED FOR MINIMUM OF 2 HOUR FIRE RATING.

19.) 10" + 2" PC PLANK INDICATES SPAN OF 10" DEEP PRESTRESSED, PRECAST CONCRETE HOLLOW CORE PLANK WITH A MINIMUM 2" OF NORMAL WEIGHT CONCRETE TOPPING. PLANK AND CONCRETE TOPPING SLAB TO BE DESIGNED TO SUPPORT A MINIMUM LIVE LOAD CAPACITY OF 150 PSF. PRECAST CONCRETE PLANK TO BE DESIGNED FOR MINIMUM OF 2 HOUR FIRE RATING

20.) FOR DIMENSIONS AND ELEVATIONS NOT GIVEN REFER TO ARCHITECTURAL DRAWINGS.

21.) WF INDICATES A SPLICE CONNECTION ALONG A CONTINUOUS STEEL BEAM. DESIGN SPLICE CONNECTION FOR FULL CAPACITY OF STEEL BEAM.

22.) INDICATES A SLAB DEPRESSION. REFER TO DETAILS 1 ON DRAWING S0-0-6.

23.) 9/16" INDICATES SPAN DIRECTION OF 9/16" DEEP, 20 GAGE GALVANIZED STEEL ROOF DECK.

24.) XX"x"XX" INDICATES OPENING IN WEB OF STEEL BEAM FOR MECH/ ELECT/PLUMB/ FIRE PROTECT/ ETC COORDINATE WITH APPLICABLE DRAWING FOR OPENING SIZE. SEE TYPICAL DETAIL 2 AND A DR S0-0-6 FOR ADDITIONAL INFORMATION.

25.) 3" INDICATES SPAN DIRECTION OF 3" DEEP, 20 GAGE TYPE N, GALVANIZED STEEL ROOF DECK. SS-S-2 24

FRAMING ELEVATION NOTES:

1.) TYPICAL UNDERSIDE-OF-DECK ELEVATION = (162' - 0") AT THE ROOF LEVEL, IN THE AREA BOUNDED BY GRIDS (K) - (S) AND (4) - (33). UNLESS NOTED OTHERWISE AS (X' - X"), (+'-X' - X"), OR HI/LO.

2.) TYPICAL UNDERSIDE-OF-DECK ELEVATION = (163' - 4") AT THE ELEVATOR ROOF - AREA A.

3.) COORDINATE ALL ELEVATIONS WITH ARCHITECTURAL DRAWINGS.

4.) SLOPE STEEL UNIFORMLY TO COLUMN ELEVATIONS SHOWN ON PLANS.

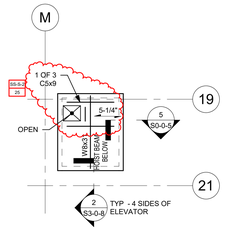

ELEVATOR ROOF FRAMING PART PLAN - AREA A

U/D ELEV = 163' - 4"

BRACE FRAME KEY

0" TYP — WF / BF-X	INDICATES A BRACE FRAME ABOVE AND BELOW LEVEL
0" TYP — BF-X / WF	INDICATES A BRACE FRAME ABOVE LEVEL
0" TYP — WF / BF-X	INDICATES A BRACE FRAME BELOW LEVEL

DRA

Drummey Rosane Anderson, Inc.

225 Oakland Road
Studio 205
South Windsor, CT
06074

260 Charles Street
Studio 300
Waltham, MA
02453

Planning | Architecture | Interior Design

Tel: 617.964.1700
www.draws.com

NORTHEAST METRO TECH

100 Hemlock Rd,
Wakefield, MA 01880

EDG

Engineers Design Group Inc.
Structural Engineers
389 Main Street, Suite 401
Malden, MA 02148
(781)396-9007
EDG@EDGINC.COM

REVISION LIST

SS-S-1	4/14/2023	STRUCTURAL STEEL ADDENDUM 1
SS-S-2	4/21/2023	STRUCTURAL STEEL ADDENDUM 2

FOR REFERENCE ONLY
SCOPE OF WORK ON THIS DRAWING IS A PART OF EARLY STRUCTURAL BID PACKAGE

© COPYRIGHT 2021 DRUMMEY ROSANE ANDERSON, INC.

MSBA 90% CD SUBMISSION

MAY 12, 2023

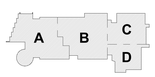

KEY PLAN

PROJECT NORTH | MAGNETIC NORTH

ROOF FRAMING PLAN - AREA A

Scale: 1/8" = 1'-0"
Job No.: 20202
Drawn By: EDG
Date: MAY 12, 2023

S1-1-5A

FIREPROOFING NOTES:

1. STEEL COLUMNS, SHOWN ON THIS DRAWING, SHALL RECEIVE 2-HOUR FIRE RATING BY CEMENTITIOUS FIREPROOFING UNLESS INDICATED AS A ROUND HSS COLUMN. EXPOSED TO VIEW PORTION OF ROUND HSS COLUMNS SHALL RECEIVE 2-HOUR FIRE RATING BY INTUMESCENT MASTIC FIREPROOFING. CONCEALED FROM VIEW PORTION OF ROUND HSS COLUMN SHALL RECEIVE 2-HOUR FIRE RATING BY CEMENTITIOUS FIREPROOFING.
2. STEEL BEAMS AND KICKERS SHOWN ON THIS DRAWING, SUPPORTING ROOF SHALL RECEIVE 1-HOUR RATING BY CEMENTITIOUS FIREPROOFING. METAL ROOF DECK TO RECEIVE 1-HOUR FIRE RATING BY CEMENTITOUS FIREPROOFING.
3. CONCEALED FROM VIEW BRACED FRAMES SHALL RECEIVE 2-HOUR FIRE RATING BY CEMENTITIOUS FIREPROOFING .
4. EXPOSED TO VIEW BRACED FRAMES SHALL RECEIVE 2-HOUR FIRE RATING BY INTUMENCENT MASTIC FIREPROOFING.
5. COORDINATE FIREPROOFING REQUIREMENTS WITH THE SPECIFICATIONS AND ARCHITECTURAL DRAWINGS.

BRACE FRAME KEY

0" TYP WF BF-X		INDICATES A BRACE FRAME ABOVE AND BELOW LEVEL
0" TYP BF-X WF		INDICATES A BRACE FRAME ABOVE LEVEL
0" TYP WF BF-X		INDICATES A BRACE FRAME BELOW LEVEL

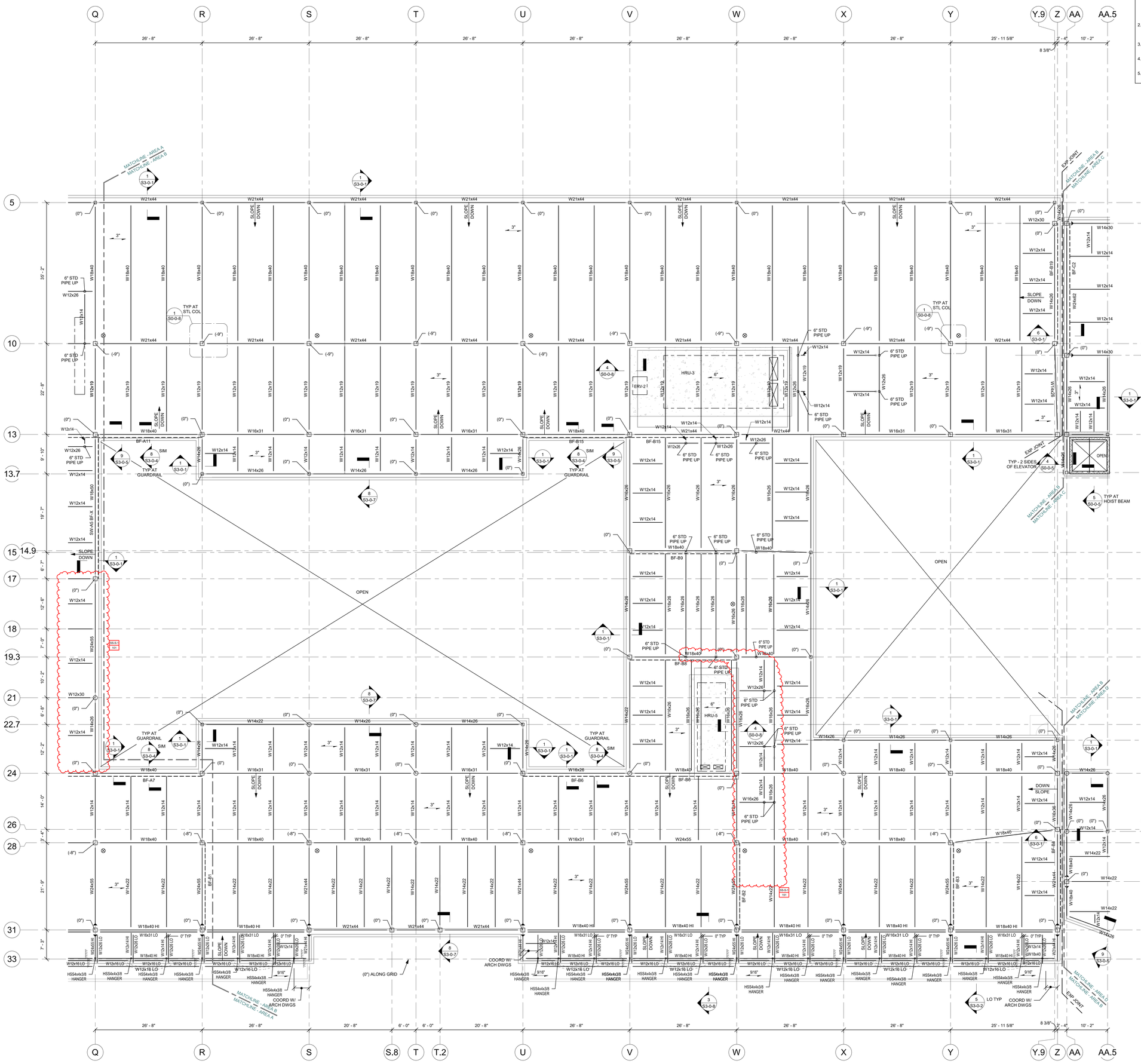

FRAMING ELEVATION NOTES:

1.) TYPICAL UNDERSIDE-OF-DECK ELEVATION = (16Z' - 0") AT THE ROOF LEVEL, IN THE AREA BOUNDED BY GRIDS (Q) - (Z) AND (5) - (33). UNLESS NOTED OTHERWISE AS (X' - X"), (+/-X' - X"), OR HILO.

2.) COORDINATE ALL ELEVATIONS WITH ARCHITECTURAL DRAWINGS.

3.) SLOPE STEEL UNIFORMLY TO COLUMN ELEVATIONS SHOWN ON PLANS.

DRA

Drummey Rosane Anderson, Inc.

225 Oakland Road
Studio 205
South Windsor, CT
06074

260 Charles Street
Studio 300
Waltham, MA
02453

Planning | Architecture | Interior Design

Tel: 617.964.1700
www.draiwa.com

NORTHEAST METRO TECH

100 Hemlock Rd,
Wakefield, MA 01880

EDG
Engineers Design Group Inc.
Structural Engineers
389 Main Street, Suite 401
Malden, MA 02148
(781)396-9007
EDG@EDGINC.COM

REVISION LIST

SS-S-1	4/14/2023	STRUCTURAL STEEL ADDENDUM 1

FOR REFERENCE ONLY
SCOPE OF WORK ON THIS DRAWING IS A PART OF EARLY STRUCTURAL BID PACKAGE

© COPYRIGHT 2021 DRUMMEY ROSANE ANDERSON, INC.

MSBA 90% CD SUBMISSION

MAY 12, 2023

KEY PLAN

PROJECT NORTH

MAGNETIC NORTH

ROOF FRAMING PLAN - AREA B

Scale: 1/8" = 1'-0"
Job No.: 20202
Drawn By: EDG
Date: MAY 12, 2023

S1-1-5B

FIREPROOFING NOTES:

1. STEEL COLUMNS SHOWN ON THIS DRAWING SHALL RECEIVE 2-HOUR FIRE RATING BY CEMENTITIOUS FIREPROOFING UNLESS INDICATED AS A ROUND HSS COLUMN. EXPOSED TO VIEW PORTION OF ROUND HSS COLUMNS SHALL RECEIVE 2-HOUR FIRE RATING BY INTUMESCENT MASTIC FIREPROOFING. CONCEALED FROM VIEW PORTION OF ROUND HSS COLUMN SHALL RECEIVE 2-HOUR FIRE RATING BY CEMENTITIOUS FIREPROOFING
2. STEEL BEAMS AND KICKERS SHOWN ON THIS DRAWING, SUPPORTING ROOF SHALL RECEIVE 1-HOUR RATING BY CEMENTITIOUS FIREPROOFING. METAL ROOF DECK TO RECEIVE 1-HOUR FIRE RATING BY CEMENTITOUS FIREPROOFING.
3. CONCEALED FROM VIEW BRACED FRAMES SHALL RECEIVE 2-HOUR FIRE RATING BY CEMENTITIOUS FIREPROOFING .
4. EXPOSED TO VIEW BRACED FRAMES SHALL RECEIVE 2-HOUR FIRE RATING BY INTUMENCENT MASTIC FIREPROOFING.
5. COORDINATE FIREPROOFING REQUIREMENTS WITH THE SPECIFICATIONS AND ARCHITECTURAL DRAWINGS.

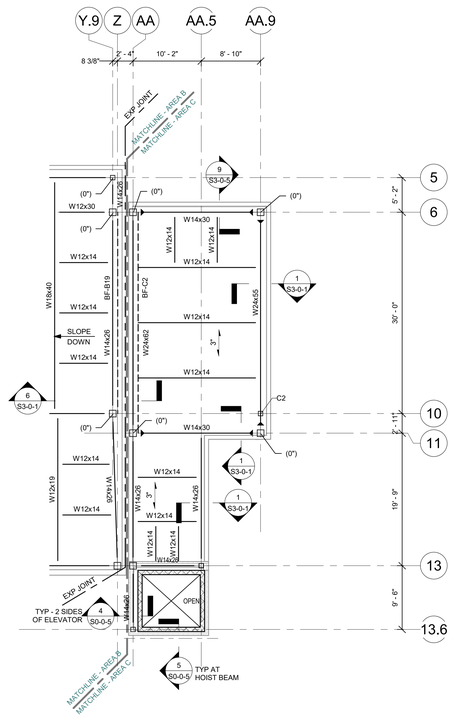

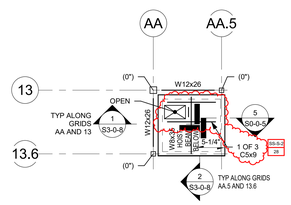

ELEVATOR ROOF FRAMING PART PLAN - AREA C

U/D ELEV = 163' - 4"

FRAMING NOTES:

1.) FOR GENERAL NOTES AND TYPICAL DETAILS SEE DRAWINGS S0-0-1, S0-0-2, S0-0-3, S0-0-4, S0-0-5 , S0-0-6, S0-0-7 AND S0-0-8.

2.) REFER TO ARCHITECTURAL DRAWINGS FOR ELEVATIONS AND VERTICAL DIMENSIONS. PITCH ALL STEEL UNIFORMLY TO LOW POINTS AT THE COLUMNS AND BENT BEAMS AS SHOWN ON THE ARCHITECTURAL DRAWINGS.

3.) BF-1 ETC... INDICATES A BRACED BAY. REFER TO BRACED FRAME ELEVATIONS AND DETAILS ON DRAWINGS S4-0-1, S4-0-2, S4-0-3, S4-0-4, S4-0-5, S4-0-6, S4-0-7 AND S4-0-8 FOR ADDITIONAL INFORMATION.

4.) [XX] INDICATES THE NUMBER OF 3/4" DIAMETER x 4 1/4" LONG HEADED STUDS WELDED TO THE TOP FLANGE OF THE BEAM. SPACE STUDS EVENLY ALONG THE BEAM UNLESS NOTED OTHERWISE.

5.) INDICATES A MOMENT CONNECTION TO DEVELOP THE FULL CAPACITY OF THE MEMBER. REFER TO TYPICAL DETAILS 7, 8 AND 9 ON DRAWING S0-0-6.

6.) INDICATES A 5/16" FILLET WELD ALL AROUND. (HSS BEAM TO HSS COLUMN) WHERE BEAM DIMENSIONS EXCEED COLUMN DIMENSIONS PROVIDE 1/2" THICK STEEL CAP PLATE TO ACHIEVE ALL AROUND WELD. REFER TO TYPICAL DETAIL 2 ON DRAWING S0-0-7.

7.) < X" > INDICATES UPWARD CAMBER AT THE MID-SPAN OF THE MEMBER.

8.) 5-1/4" INDICATES SPAN DIRECTION OF 2" DEEP, 20 GAGE GALVANIZED COMPOSITE STEEL DECK WITH 3 1/4" LIGHT WEIGHT CONCRETE TOPPING. TOTAL THICKNESS = 5 1/4". REINFORCE WITH 6x6 - W2.1xW2.1 WWR.

9.) 1 1/2" INDICATES SPAN DIRECTION OF 1 1/2" DEEP, 20 GAGE ~~TYPE B, GALVANIZED STEEL ROOF DECK.~~

10.) 3" NA INDICATES SPAN DIRECTION OF 3" DEEP, 20 GAGE TYPE NA, GALVANIZED ACOUSTIC STEEL ROOF DECK. SS-S-2 #8

11.) 4" LW INDICATES SPAN DIRECTION OF 1 1/2" DEEP, 20 GAGE GALVANIZED COMPOSITE STEEL DECK WITH 2 1/2" LIGHT WEIGHT CONCRETE TOPPING. TOTAL THICKNESS = 4". REINFORCE WITH 6x6 - W2.1xW2.1 WWR.

12.) FOR EXACT NUMBER, SIZE, AND LOCATION OF OPENING IN STEEL DECKING REFER TO MECHANICAL AND ARCHITECTURAL DRAWINGS. FOR FRAMING INFORMATION, REFER TO DETAILS 1, 2 AND 3 ON DRAWING S0-0-8.

13.) 6" HATCHED AREA INDICATES LOCATION OF CONCRETE SLAB WITH 3" DEEP, 18 GAGE GALVANIZED COMPOSITE STEEL DECK WITH 4" NORMAL WEIGHT CONCRETE TOPPING. TOTAL THICKNESS = 6". REINFORCE WITH 6x6 - W2.1xW2.1 WWR. REFER TO TYPICAL DETAIL 5 ON DRAWING S0.07 FOR ADDITIONAL INFORMATION. USE 3/4" DIA x 5" LONG HEADED STUDS.

14.) INDICATES A ROOF DRAIN. REFER TO TYPICAL STRUCTURAL DETAILS 1 AND 2 ON DRAWING S0-0-8 AND DETAIL 1 ON DRAWING S0-0-8. FOR DECKING SUPPORT, REFER TO DETAIL 6 ON DRAWING S0-0-7. REFER TO PLUMBING AND ARCHITECTURAL DRAWINGS FOR OPENING SIZES AND LOCATIONS.

15.) CT INDICATES A COLUMN TERMINATES AT THIS LEVEL.

16.) WF INDICATES A BEND IN THE STEEL BEAM. REFER TO TYPICAL DETAIL 9 ON DRAWING S0-0-7.

17.) OR OR INDICATES A CMU WALL. REFER TO TYPICAL DETAIL 8 ON DRAWING S0-0-4 FOR REINFORCEMENT, DETAIL 6 ON DRAWING S0-0-5 FOR CONNECTION OF SHEAR WALLS TO BEAMS AND COLUMNS, AND DETAIL 7 ON DRAWING S0-0-5 FOR CONNECTIONS TO STEEL BEAMS AND CONCRETE SLABS AT THE TOP OF WALL FOR NON-STRUCTURAL WALLS. REFER TO RELEVANT SECTIONS FOR CONNECTIONS OF SHEAR WALLS TO THE STRUCTURE.

18.) 8" + 2" PC PLANK INDICATES SPAN OF 8" DEEP PRESTRESSED, PRECAST CONCRETE HOLLOW CORE PLANK WITH A MINIMUM 2" OF NORMAL WEIGHT CONCRETE TOPPING. PLANK AND CONCRETE TOPPING SLAB TO BE DESIGNED TO SUPPORT A MINIMUM LIVE LOAD CAPACITY OF 150 PSF. PRECAST CONCRETE PLANK TO BE DESIGNED FOR MINIMUM OF 2 HOUR FIRE RATING.

19.) 10" + 2" PC PLANK INDICATES SPAN OF 10" DEEP PRESTRESSED, PRECAST CONCRETE HOLLOW CORE PLANK WITH A MINIMUM 2" OF NORMAL WEIGHT CONCRETE TOPPING. PLANK AND CONCRETE TOPPING SLAB TO BE DESIGNED TO SUPPORT A MINIMUM LIVE LOAD CAPACITY OF 150 PSF. PRECAST CONCRETE PLANK TO BE DESIGNED FOR MINIMUM OF 2 HOUR FIRE RATING

20.) FOR DIMENSIONS AND ELEVATIONS NOT GIVEN REFER TO ARCHITECTURAL DRAWINGS.

21.) WF INDICATES A SPLICE CONNECTION ALONG A CONTINUOUS STEEL BEAM. DESIGN SPLICE CONNECTION FOR FULL CAPACITY OF STEEL BEAM.

22.) INDICATES A SLAB DEPRESSION. REFER TO DETAILS 1 ON DRAWING S0-0-6.

23.) 9/16" INDICATES SPAN DIRECTION OF 9/16" DEEP, 20 GAGE GALVANIZED STEEL ROOF DECK.

24.) XX"XXX" INDICATES OPENING IN WEB OF STEEL BEAM FOR MECH/ ELECT/PLUMB/ FIRE PROTECT/ ETC COORDINATE WITH APPLICABLE DRAWING FOR OPENING SIZE. ~~SEE TYPICAL DETAIL 5 AND 6 ON S0-0-8 FOR ADDITIONAL INFORMATION.~~

25.) 3" INDICATES SPAN DIRECTION OF 3" DEEP, 20 GAGE TYPE N, GALVANIZED STEEL ROOF DECK. SS-S-2 #7

FRAMING ELEVATION NOTES:

1.) TYPICAL UNDERSIDE-OF-DECK ELEVATION = (162' - 0") AT THE ROOF LEVEL, IN THE AREA BOUNDED BY GRIDS (AA) - (AA.9) AND (6) - (13.9). UNLESS NOTED OTHERWISE AS (X' - X"), (+/-X' - X"), OR HI/LO.

2.) TYPICAL UNDERSIDE-OF-DECK ELEVATION = (163' - 4") AT THE ELEVATOR ROOF - AREA C.

3.) COORDINATE ALL ELEVATIONS WITH ARCHITECTURAL DRAWINGS.

4.) SLOPE STEEL UNIFORMLY TO COLUMN ELEVATIONS SHOWN ON PLANS.

BRACE FRAME KEY

0" TYP — WF / BF-X	INDICATES A BRACE FRAME ABOVE AND BELOW LEVEL
0" TYP — BF-X / WF	INDICATES A BRACE FRAME ABOVE LEVEL
0" TYP — WF / BF-X	INDICATES A BRACE FRAME BELOW LEVEL

DRA

Drummey Rosane Anderson, Inc.

225 Oakland Road
Studio 205
South Windsor, CT
06074

260 Charles Street
Studio 300
Waltham, MA
02453

Planning | Architecture | Interior Design

Tel: 617.964.1700
www.draws.com

NORTHEAST METRO TECH

100 Hemlock Rd,
Wakefield, MA 01880

EDG

Engineers Design Group Inc.
Structural Engineers
389 Main Street, Suite 401
Malden, MA 02148
(781)396-9007
EDG@EDGINC.COM

REVISION LIST

SS-S-2	4/21/2023	STRUCTURAL STEEL ADDENDUM 2

FOR REFERENCE ONLY
SCOPE OF WORK ON THIS DRAWING IS A PART OF EARLY STRUCTURAL BID PACKAGE

© COPYRIGHT 2021 DRUMMEY ROSANE ANDERSON, INC.

MSBA 90% CD SUBMISSION

MAY 12, 2023

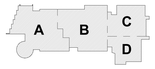

KEY PLAN

PROJECT NORTH | MAGNETIC NORTH

ROOF FRAMING PLAN - AREA C

Scale: 1/8" = 1'-0"
Job No.: 20202
Drawn By: EDG
Date: MAY 12, 2023

S1-1-5C

FIREPROOFING NOTES:

1. STEEL COLUMNS SHOWN ON THIS DRAWING SHALL RECEIVE 2-HOUR FIRE RATING BY CEMENTITIOUS FIREPROOFING UNLESS INDICATED AS A ROUND HSS COLUMN. EXPOSED TO VIEW PORTION OF ROUND HSS COLUMNS SHALL RECEIVE 2-HOUR FIRE RATING BY INTUMESCENT MASTIC FIREPROOFING. CONCEALED FROM VIEW PORTION OF ROUND HSS COLUMN SHALL RECEIVE 2-HOUR FIRE RATING BY CEMENTITIOUS FIREPROOFING.
2. STEEL BEAMS AND KICKERS SHOWN ON THIS DRAWING, SUPPORTING ROOF SHALL RECEIVE 1-HOUR RATING BY CEMENTITIOUS FIREPROOFING. METAL ROOF DECK TO RECEIVE 1-HOUR FIRE RATING BY CEMENTITOUS FIREPROOFING .
3. CONCEALED FROM VIEW BRACED FRAMES GIRTS SHALL RECEIVE 2-HOUR FIRE RATING BY CEMENTITIOUS FIREPROOFING .
4. EXPOSED TO VIEW BRACED FRAMES SHALL RECEIVE 2-HOUR FIRE RATING BY INTUMENCENT MASTIC FIREPROOFING.
5. EXPOSED TO VIEW HORIZONTAL HSS TUBES SUPPORTING CURTAINWALL CW2 SHALL RECEIVE 2-HOUR RATING BY INTUMESCENT MASTIC FIREPROOFING.
6. COORDINATE FIREPROOFING REQUIREMENTS WITH THE SPECIFICATIONS AND ARCHITECTURAL DRAWINGS.

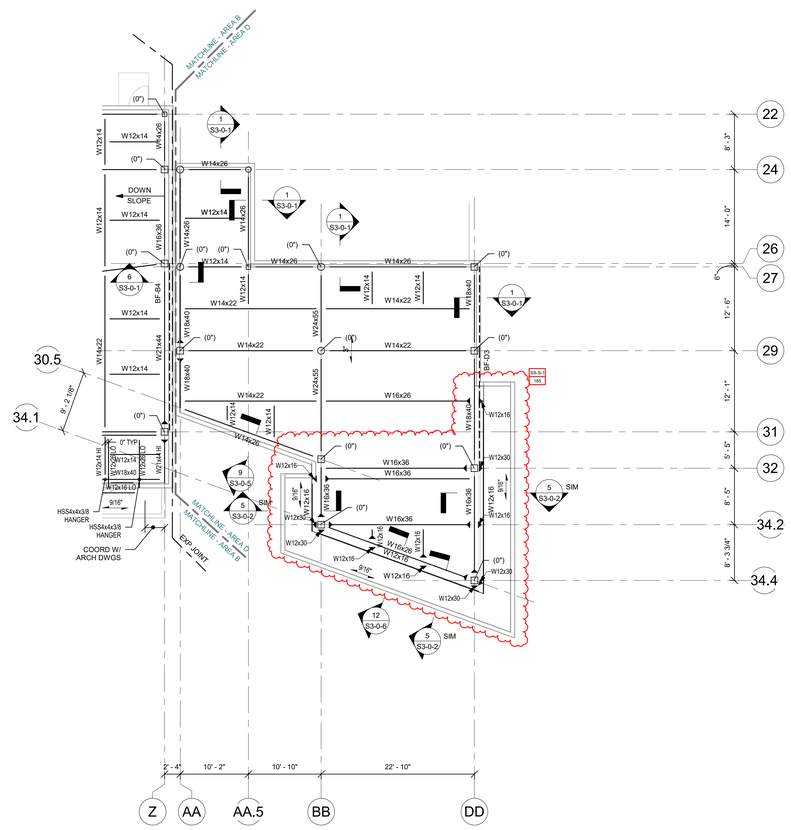

FRAMING NOTES:

1.) FOR GENERAL NOTES AND TYPICAL DETAILS SEE DRAWINGS S0-0-1, S0-0-2, S0-0-3, S0-0-4, S0-0-5 , S0-0-6, S0-0-7 AND S0-0-8.

2.) REFER TO ARCHITECTURAL DRAWINGS FOR ELEVATIONS AND VERTICAL DIMENSIONS. PITCH ALL STEEL UNIFORMLY TO LOW POINTS AT THE COLUMNS AND BENT BEAMS AS SHOWN ON THE ARCHITECTURAL DRAWINGS.

3.) BF-1 ETC... INDICATES A BRACED BAY. REFER TO BRACED FRAME ELEVATIONS AND DETAILS ON DRAWINGS S4-0-1, S4-0-2, S4-0-3, S4-0-4, S4-0-5, S4-0-6, S4-0-7 AND S4-0-8 FOR ADDITIONAL INFORMATION.

4.) [XX] INDICATES THE NUMBER OF 3/4" DIAMETER x 4 1/4" LONG HEADED STUDS WELDED TO THE TOP FLANGE OF THE BEAM. SPACE STUDS EVENLY ALONG THE BEAM UNLESS NOTED OTHERWISE.

5.) INDICATES A MOMENT CONNECTION TO DEVELOP THE FULL CAPACITY OF THE MEMBER. REFER TO TYPICAL DETAILS 7, 8 AND 9 ON DRAWING S0-0-6.

6.) INDICATES A 5/16" FILLET WELD ALL AROUND. (HSS BEAM TO HSS COLUMN) WHERE BEAM DIMENSIONS EXCEED COLUMN DIMENSIONS PROVIDE 1/2" THICK STEEL CAP PLATE TO ACHIEVE ALL AROUND WELD. REFER TO TYPICAL DETAIL 2 ON DRAWING S0-0-7.

7.) < X" > INDICATES UPWARD CAMBER AT THE MID-SPAN OF THE MEMBER.

8.) 5-1/4" INDICATES SPAN DIRECTION OF 2" DEEP, 20 GAGE GALVANIZED COMPOSITE STEEL DECK WITH 3 1/4" LIGHT WEIGHT CONCRETE TOPPING. TOTAL THICKNESS = 5 1/4". REINFORCE WITH 6x6 - W2.1xW2.1 WWR.

9.) 1 1/2" INDICATES SPAN DIRECTION OF 1 1/2" DEEP, 20 GAGE ~~TYPE B, GALVANIZED STEEL ROOF DECK.~~

10.) 3" NA INDICATES SPAN DIRECTION OF 3" DEEP, 20 GAGE TYPE NA, GALVANIZED ACOUSTIC STEEL ROOF DECK. SS-S-2 1B

11.) 4" LW INDICATES SPAN DIRECTION OF 1 1/2" DEEP, 20 GAGE GALVANIZED COMPOSITE STEEL DECK WITH 2 1/2" LIGHT WEIGHT CONCRETE TOPPING. TOTAL THICKNESS = 4". REINFORCE WITH 6x6 - W2.1xW2.1 WWR.

12.) FOR EXACT NUMBER, SIZE, AND LOCATION OF OPENING IN STEEL DECKING REFER TO MECHANICAL AND ARCHITECTURAL DRAWINGS. FOR FRAMING INFORMATION, REFER TO DETAILS 1, 2 AND 3 ON DRAWING S0-0-8.

13.) 6" HATCHED AREA INDICATES LOCATION OF CONCRETE SLAB WITH 3" DEEP, 18 GAGE GALVANIZED COMPOSITE STEEL DECK WITH 4" NORMAL WEIGHT CONCRETE TOPPING. TOTAL THICKNESS = 6". REINFORCE WITH 6x6 - W2.1xW2.1 WWR. REFER TO TYPICAL DETAIL 5 ON DRAWING S0.07 FOR ADDITIONAL INFORMATION. USE 3/4" DIA x 5" LONG HEADED STUDS.

14.) ⊗ INDICATES A ROOF DRAIN. REFER TO TYPICAL STRUCTURAL DETAILS 1 AND 2 ON DRAWING S0-0-8 AND DETAIL 1 ON DRAWING S0-0-6. FOR DECKING SUPPORT, REFER TO DETAIL 6 ON DRAWING S0-0-7. REFER TO PLUMBING AND ARCHITECTURAL DRAWINGS FOR OPENING SIZES AND LOCATIONS.

15.) CT INDICATES A COLUMN TERMINATES AT THIS LEVEL.

16.) WF INDICATES A BEND IN THE STEEL BEAM. REFER TO TYPICAL DETAIL 9 ON DRAWING S0-0-7.

17.) OR OR INDICATES A CMU WALL. REFER TO TYPICAL DETAIL 8 ON DRAWING S0-0-4 FOR REINFORCEMENT. DETAIL 6 ON DRAWING S0-0-5 FOR CONNECTION OF SHEAR WALLS TO BEAMS AND COLUMNS, AND DETAIL 7 ON DRAWING S0-0-5 FOR CONNECTIONS TO STEEL BEAMS AND CONCRETE SLABS AT THE TOP OF WALL FOR NON-STRUCTURAL WALLS. REFER TO RELEVANT SECTIONS FOR CONNECTIONS OF SHEAR WALLS TO THE STRUCTURE.

18.) 8" + 2" PC PLANK INDICATES SPAN OF 8" DEEP PRESTRESSED, PRECAST CONCRETE HOLLOW CORE PLANK WITH A MINIMUM 2" OF NORMAL WEIGHT CONCRETE TOPPING. PLANK AND CONCRETE TOPPING SLAB TO BE DESIGNED TO SUPPORT A MINIMUM LIVE LOAD CAPACITY OF 150 PSF. PRECAST CONCRETE PLANK TO BE DESIGNED FOR MINIMUM OF 2 HOUR FIRE RATING.

19.) 10" + 2" PC PLANK INDICATES SPAN OF 10" DEEP PRESTRESSED, PRECAST CONCRETE HOLLOW CORE PLANK WITH A MINIMUM 2" OF NORMAL WEIGHT CONCRETE TOPPING. PLANK AND CONCRETE TOPPING SLAB TO BE DESIGNED TO SUPPORT A MINIMUM LIVE LOAD CAPACITY OF 150 PSF. PRECAST CONCRETE PLANK TO BE DESIGNED FOR MINIMUM OF 2 HOUR FIRE RATING

20.) FOR DIMENSIONS AND ELEVATIONS NOT GIVEN REFER TO ARCHITECTURAL DRAWINGS.

21.) WF INDICATES A SPLICE CONNECTION ALONG A CONTINUOUS STEEL BEAM. DESIGN SPLICE CONNECTION FOR FULL CAPACITY OF STEEL BEAM.

22.) INDICATES A SLAB DEPRESSION. REFER TO DETAILS 1 ON DRAWING S0-0-6.

23.) 9/16" INDICATES SPAN DIRECTION OF 9/16" DEEP, 20 GAGE GALVANIZED STEEL ROOF DECK.

24.) XX"xXX" INDICATES OPENING IN WEB OF STEEL BEAM FOR MECH/ ELECT/PLUMB/ FIRE PROTECT/ ETC COORDINATE WITH APPLICABLE DRAWING FOR OPENING SIZE. SEE TYPICAL DETAIL 5 AND 6 ON S0-0-6 FOR ADDITIONAL INFORMATION.

25.) 3" INDICATES SPAN DIRECTION OF 3" DEEP, 20 GAGE TYPE N, GALVANIZED STEEL ROOF DECK. SS-S-2 1B

FRAMING ELEVATION NOTES:

1.) TYPICAL UNDERSIDE-OF-DECK ELEVATION = (162' - 0") AT THE ROOF LEVEL. IN THE AREA BOUNDED BY GRIDS (AA) - (DD) AND (24) - (34.4). UNLESS NOTED OTHERWISE AS (X' - X"), (+/-X' - X"), OR HI/LO.

2.) COORDINATE ALL ELEVATIONS WITH ARCHITECTURAL DRAWINGS.

3.) SLOPE STEEL UNIFORMLY TO COLUMN ELEVATIONS SHOWN ON PLANS.

BRACE FRAME KEY

0" TYP WF BF-X	INDICATES A BRACE FRAME ABOVE AND BELOW LEVEL
0" TYP BF-X / WF	INDICATES A BRACE FRAME ABOVE LEVEL
0" TYP WF / BF-X	INDICATES A BRACE FRAME BELOW LEVEL

DRA

Drummey Rosane Anderson, Inc.

225 Oakland Road
Studio 205
South Windsor, CT
06074

260 Charles Street
Studio 300
Waltham, MA
02453

Planning | Architecture | Interior Design

Tel: 617.964.1700
www.draws.com

NORTHEAST METRO TECH

100 Hemlock Rd,
Wakefield, MA 01880

EDG
Engineers Design Group Inc.
Structural Engineers
389 Main Street, Suite 401
Malden, MA 02148
(781)396-9007
EDG@EDGINC.COM

REVISION LIST

SS-S-1	4/14/2023	STRUCTURAL STEEL ADDENDUM 1
SS-S-2	4/21/2023	STRUCTURAL STEEL ADDENDUM 2

FOR REFERENCE ONLY
SCOPE OF WORK ON THIS DRAWING IS A PART OF EARLY STRUCTURAL BID PACKAGE

© COPYRIGHT 2021 DRUMMEY ROSANE ANDERSON, INC.

MSBA 90% CD SUBMISSION

MAY 12, 2023

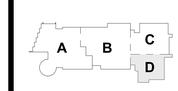

KEY PLAN

PROJECT NORTH | MAGNETIC NORTH

ROOF FRAMING PLAN - AREA D

Scale: 1/8" = 1'-0"
Job No.: 20202
Drawn By: EDG
Date: MAY 12, 2023

S1-1-5D

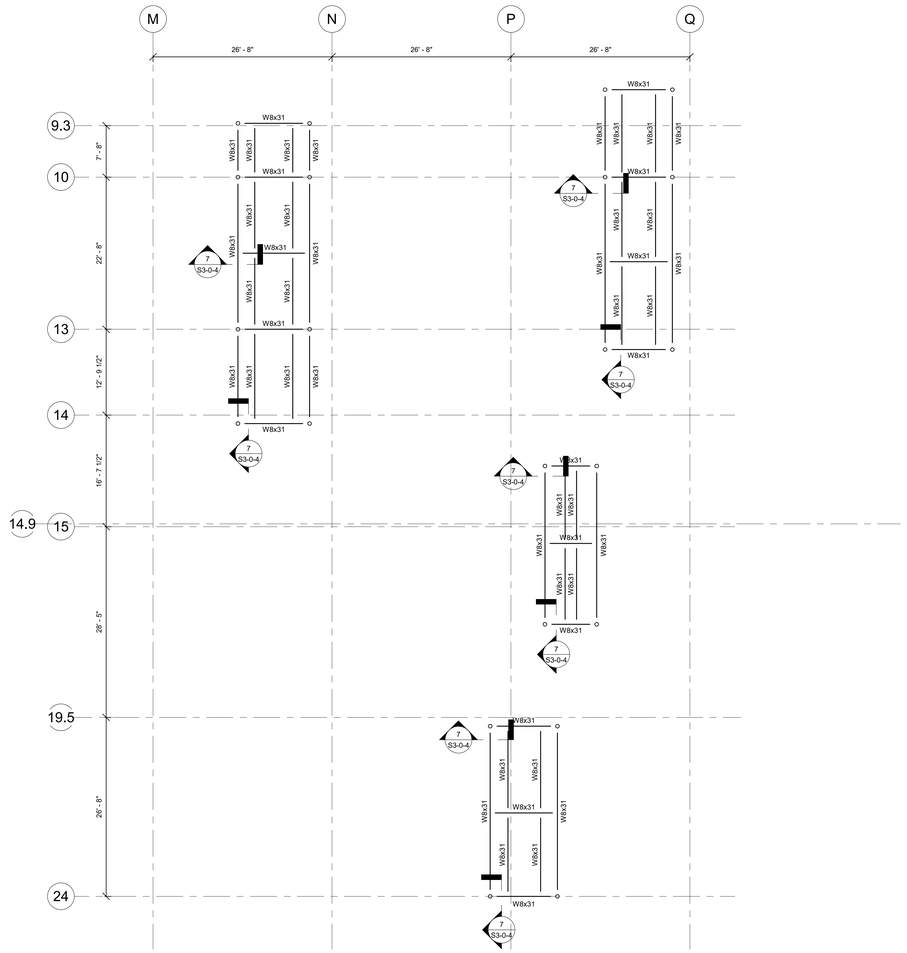

ROOF DUNNAGE FRAMING
PART PLAN - AREA A

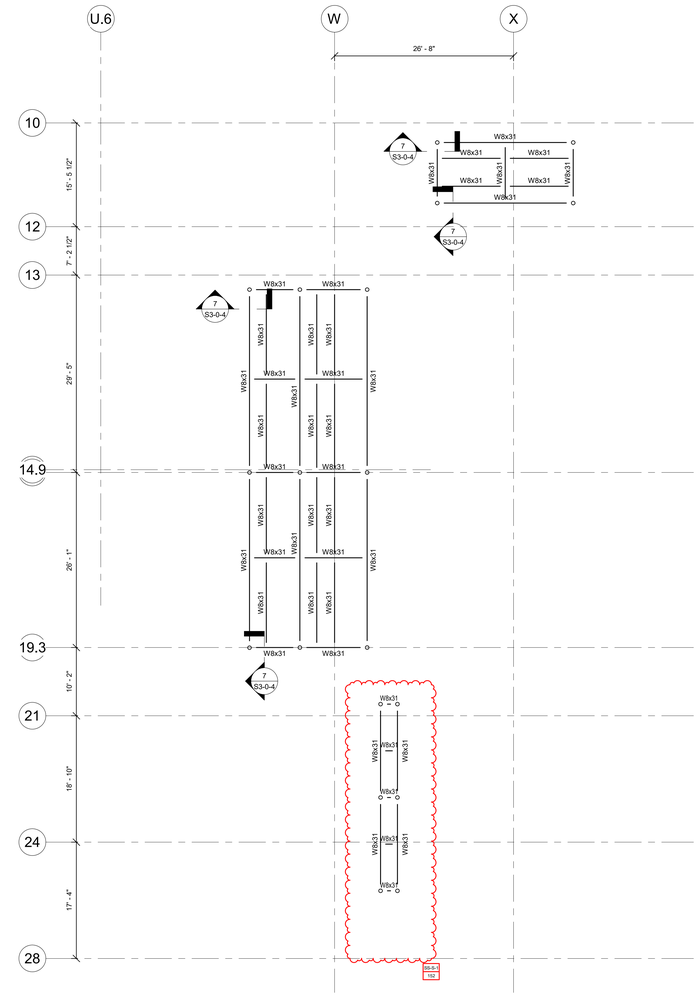

ROOF DUNNAGE FRAMING
PART PLAN - AREA B

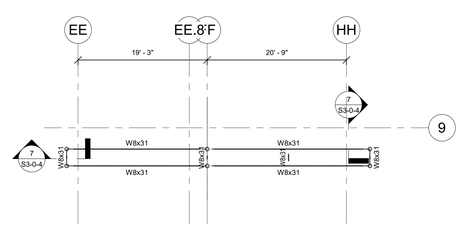

ROOF DUNNAGE FRAMING
PART PLAN - AREA C

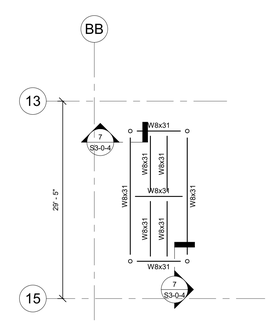

ROOF DUNNAGE FRAMING
PART PLAN - AREA C

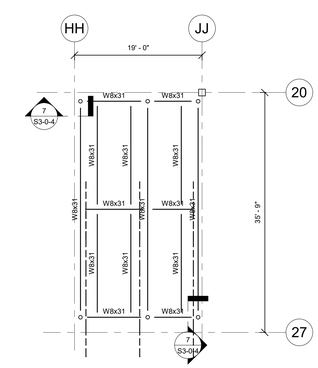

ROOF DUNNAGE FRAMING
PART PLAN - AREA D

DRA
Drummey Rosane Anderson, Inc.
225 Oakland Road
Studio 205
South Windsor, CT
06074
260 Charles Street
Studio 300
Waltham, MA
02453
Planning | Architecture | Interior Design
Tel: 617.964.1700
www.draiwa.com

NORTHEAST METRO TECH

100 Hemlock Rd,
Wakefield, MA 01880

EDG
Engineers Design Group Inc.
Structural Engineers
389 Main Street, Suite 401
Malden, MA 02148
(781)396-9007
EDG@EDGINC.COM

REVISION LIST

SS-S-1	4/14/2023	STRUCTURAL STEEL ADDENDUM 1

FOR REFERENCE ONLY
SCOPE OF WORK ON THIS DRAWING IS A PART OF EARLY STRUCTURAL BID PACKAGE

© COPYRIGHT 2021 DRUMMEY ROSANE ANDERSON, INC.

MSBA 90% CD SUBMISSION

MAY 12, 2023

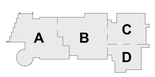

KEY PLAN

PROJECT NORTH

MAGNETIC NORTH

ROOF DUNNAGE FRAMING PARTS

Scale: 1/8" = 1'-0"
Job No.: 20202
Drawn By: EDG
Date: MAY 12, 2023

S1-1-6

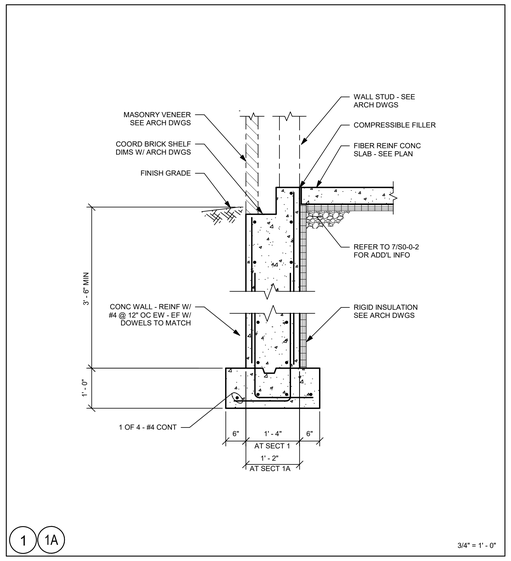

1 1A

3/4" = 1' - 0"

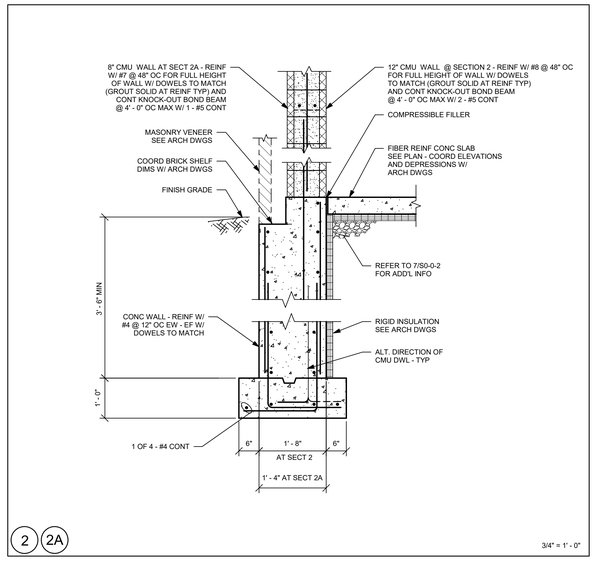

2 2A

3/4" = 1' - 0"

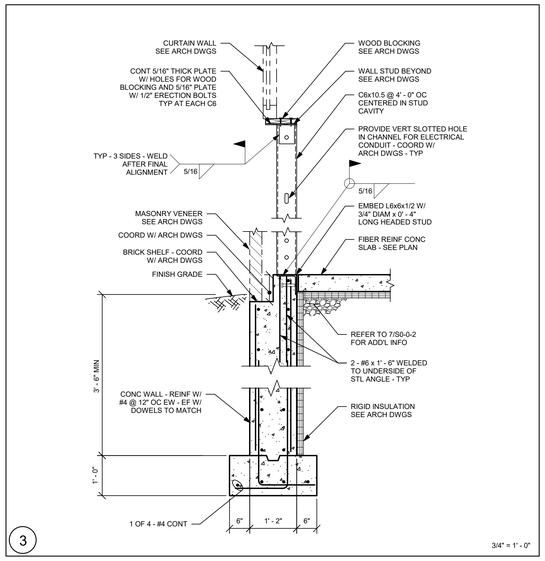

3

3/4" = 1' - 0"

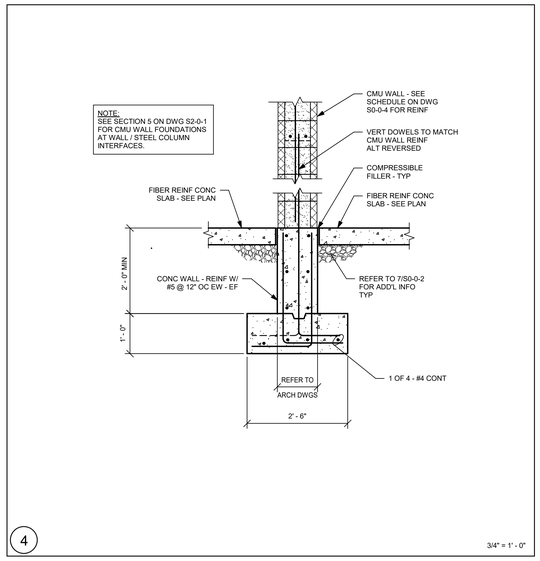

4

3/4" = 1' - 0"

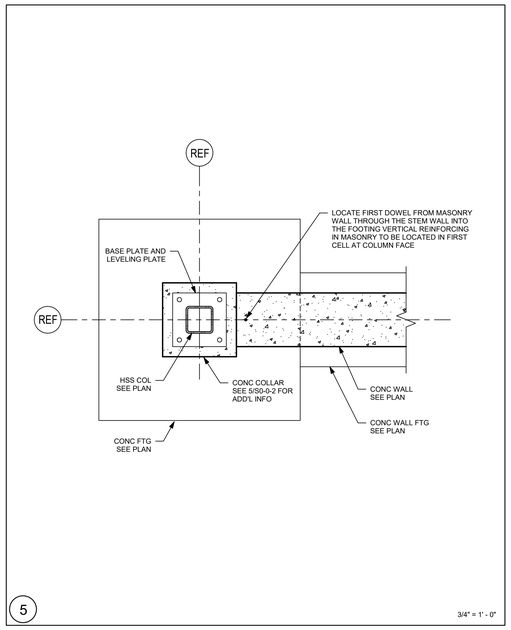

5

3/4" = 1' - 0"

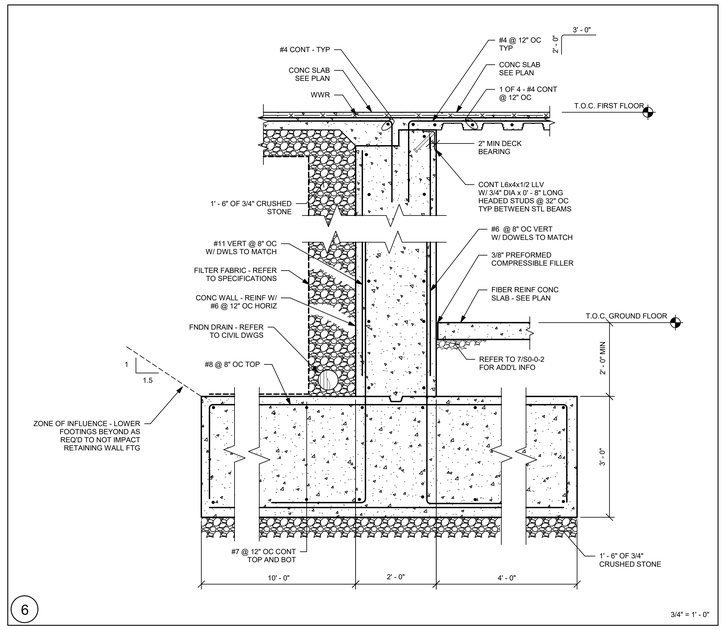

6

3/4" = 1' - 0"

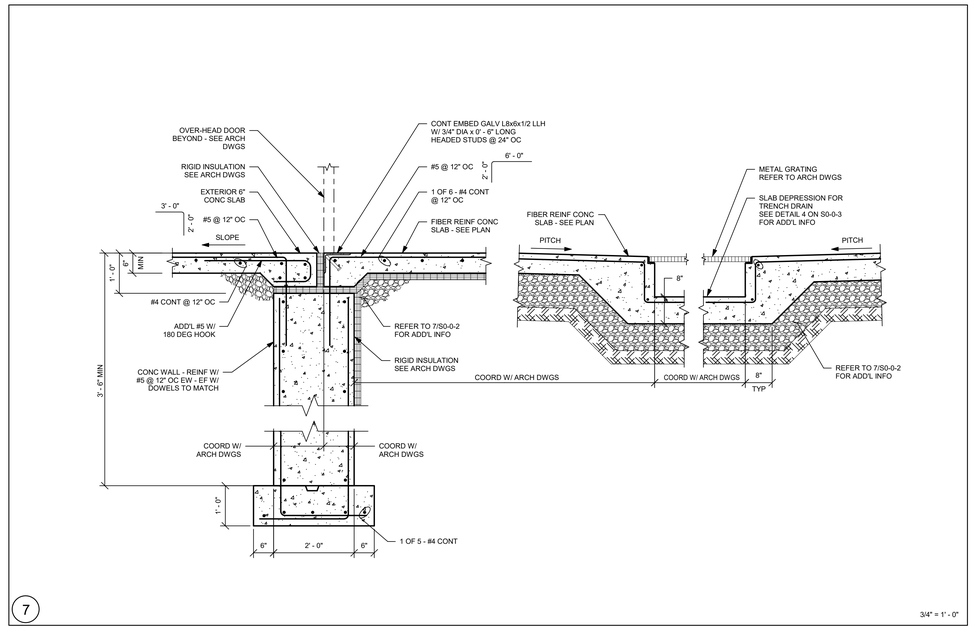

7

3/4" = 1' - 0"

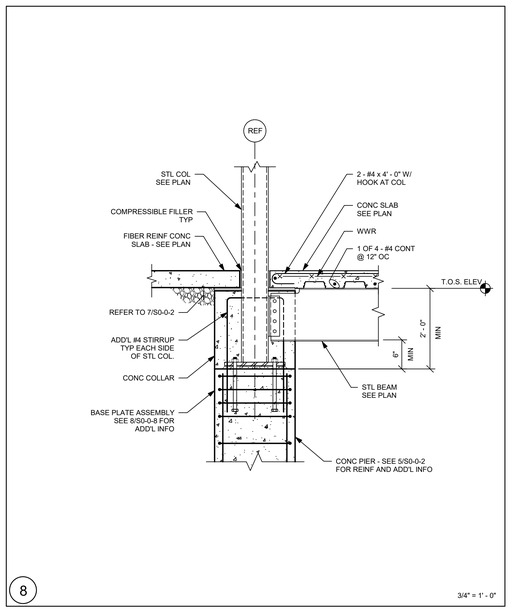

8

3/4" = 1' - 0"

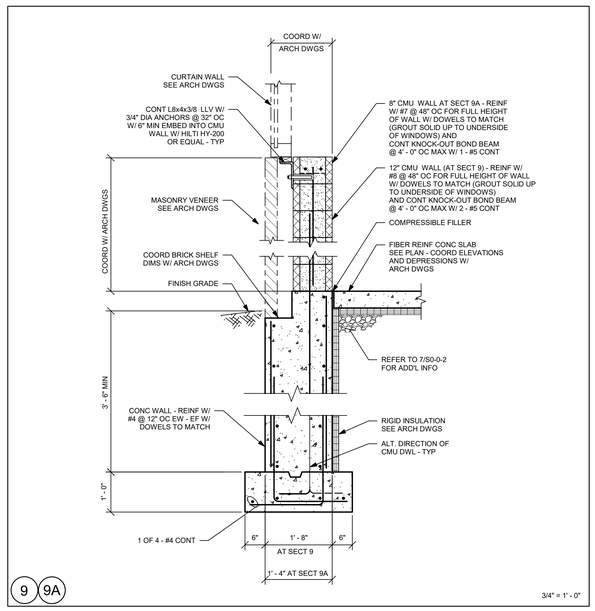

9 9A

3/4" = 1' - 0"

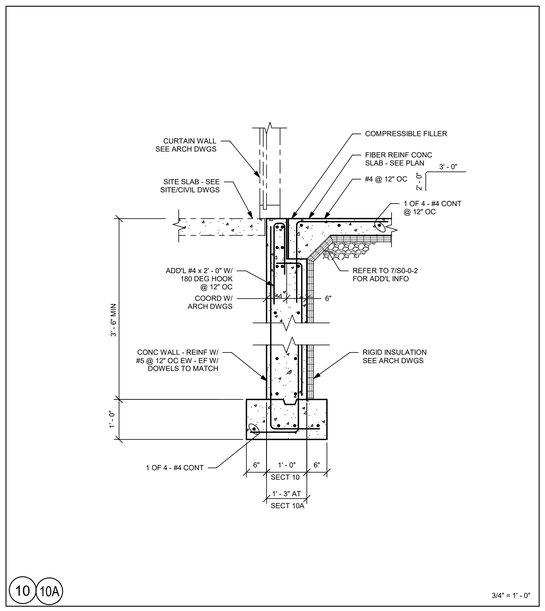

10 10A

3/4" = 1' - 0"

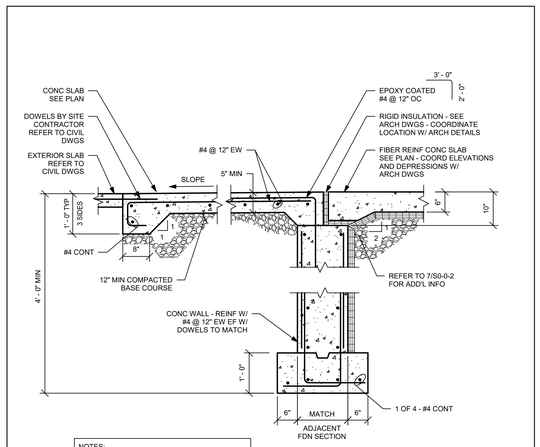

NOTES:

1.) FOR DIMENSIONS, FINISH, SLOPES AND ELEVATIONS, REFER TO LANDSCAPE AND ARCHITECTURAL DRAWINGS.

2.) TYPICAL ALL EXTERIOR DOORS UNLESS NOTED OTHERWISE ON PLAN.

TYPICAL SECTION AT EXTERIOR DOOR THRESHOLD

11

3/4" = 1' - 0"

DRA

Drummey Rosane Anderson, Inc.

225 Oakland Road
Studio 205
South Windsor, CT
06074

260 Charles Street
Studio 300
Waltham, MA
02453

Planning | Architecture | Interior Design

Tel: 617.964.1700
www.draiwa.com

NORTHEAST METRO TECH

100 Hemlock Rd,
Wakefield, MA 01880

EDG
Engineers Design Group Inc.
Structural Engineers
389 Main Street, Suite 401
Malden, MA 02148
(781)396-9007
EDG@EDGINC.COM

REVISION LIST

© COPYRIGHT 2021 DRUMMEY ROSANE ANDERSON, INC.

FOR REFERENCE ONLY
SCOPE OF WORK ON THIS DRAWING IS A PART OF EARLY STRUCTURAL BID PACKAGE

MSBA 90% CD SUBMISSION

MAY 12, 2023

KEY PLAN

PROJECT NORTH

MAGNETIC NORTH

SECTIONS

Scale: 3/4" = 1'-0"
Job No.: 20202
Drawn By: EDG
Date: MAY 12, 2023

S2-0-1

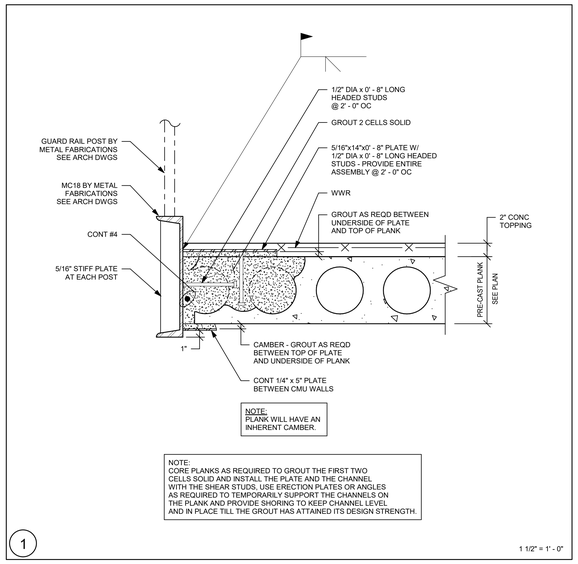

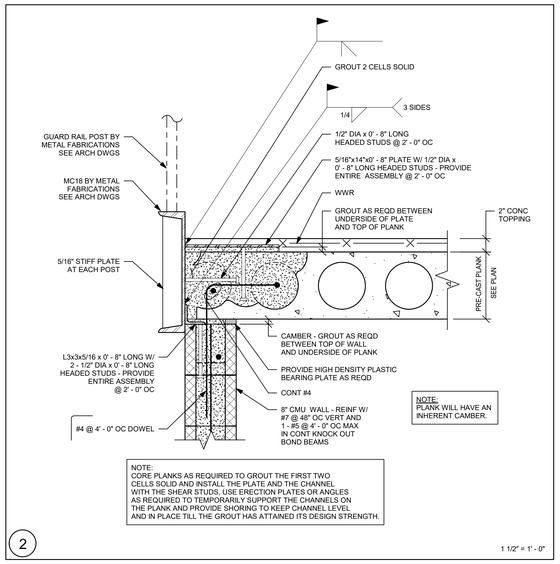

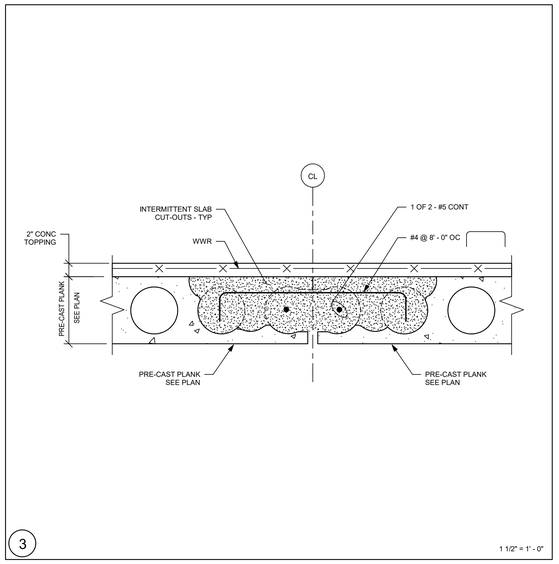

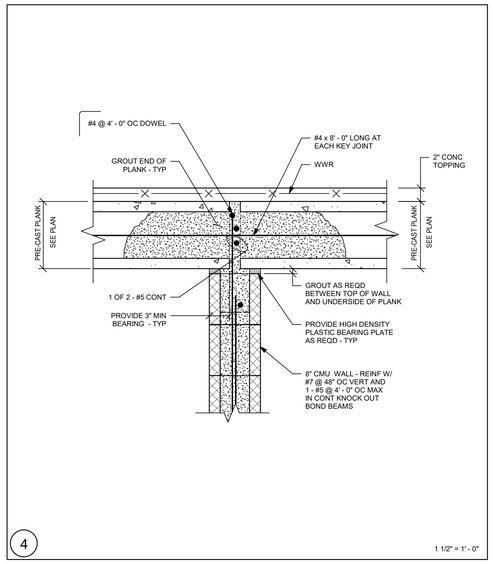

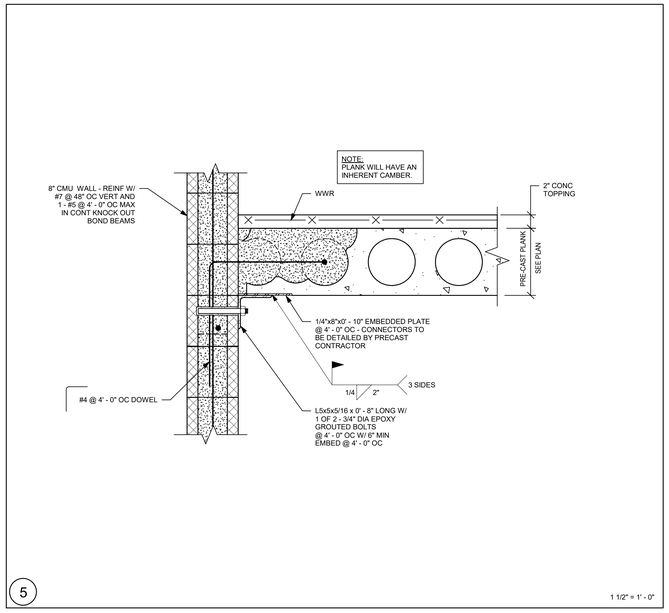

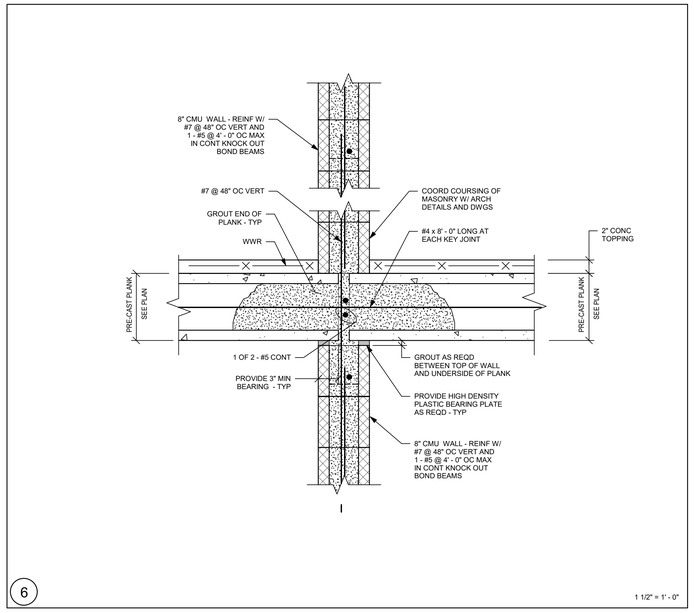

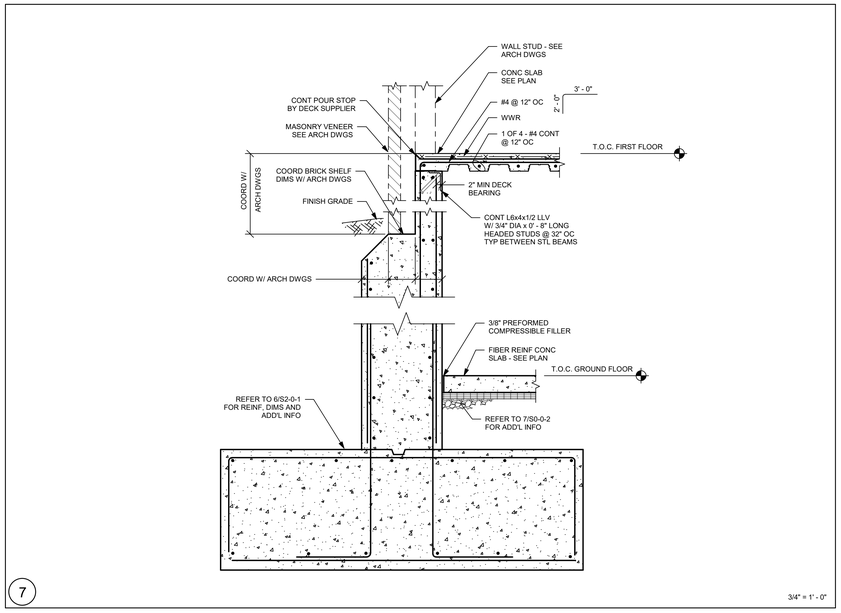

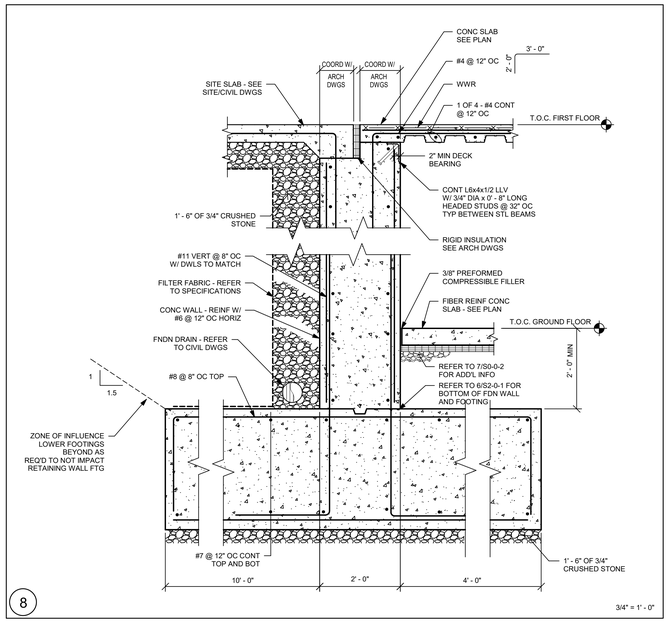

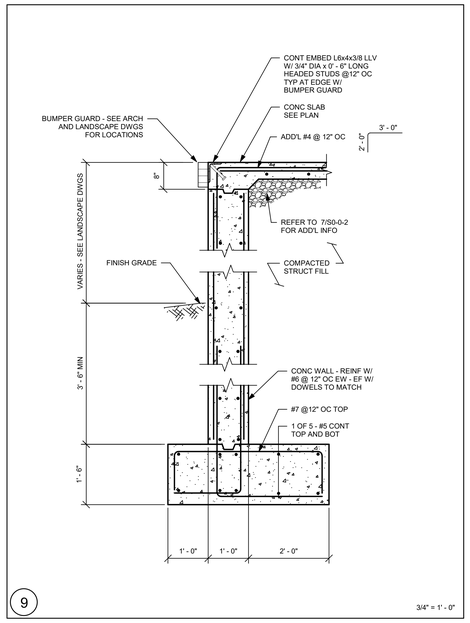

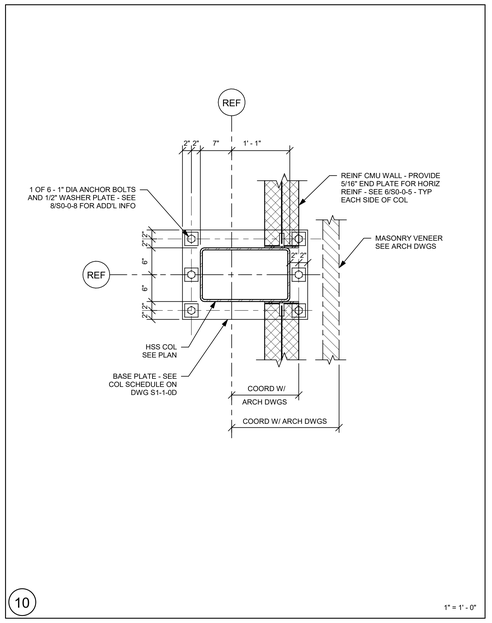

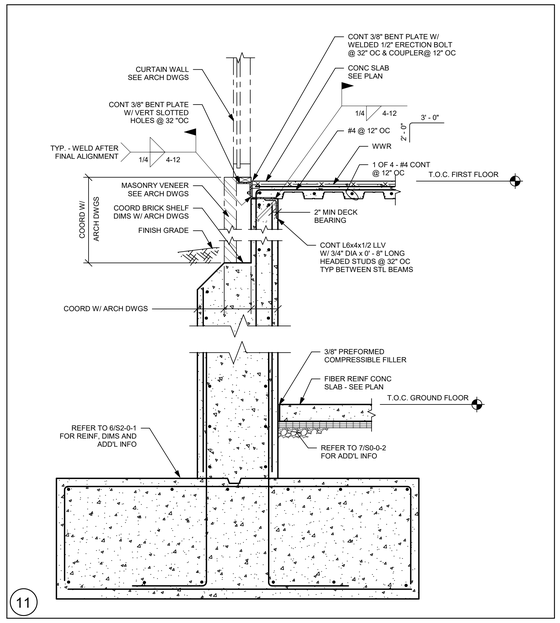

DRA

Drummey Rosane Anderson, Inc.

225 Oakland Road
Studio 205
South Windsor, CT
06074

260 Charles Street
Studio 300
Waltham, MA
02453

Planning | Architecture | Interior Design

Tel: 617.964.1700
www.draiwa.com

NORTHEAST METRO TECH

100 Hemlock Rd,
Wakefield, MA 01880

EDG
Engineers Design Group Inc.
Structural Engineers
389 Main Street, Suite 401
Malden, MA 02148
(781)396-9007
EDG@EDGINC.COM

REVISION LIST

FOR REFERENCE ONLY
SCOPE OF WORK ON THIS DRAWING IS A PART OF EARLY STRUCTURAL BID PACKAGE

© COPYRIGHT 2021 DRUMMEY ROSANE ANDERSON, INC.

MSBA 90% CD SUBMISSION

MAY 12, 2023

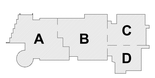

KEY PLAN

PROJECT NORTH

MAGNETIC NORTH

SECTIONS

Scale: As indicated
Job No.: 20202
Drawn By: EDG
Date: MAY 12, 2023

S2-0-2

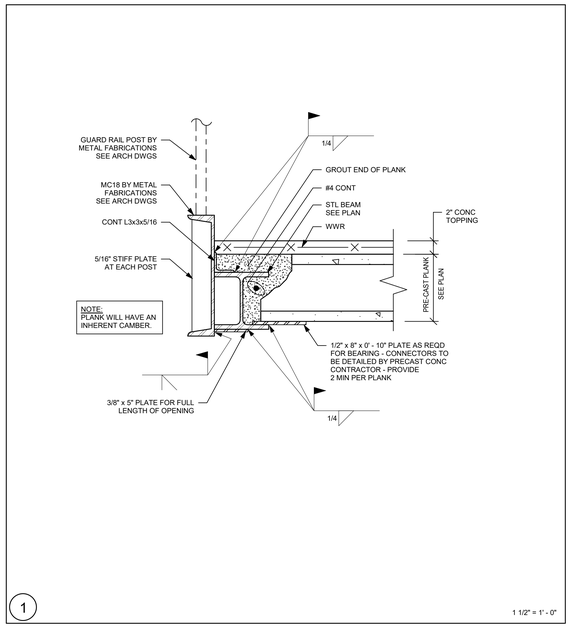

1 1/2" = 1' - 0"

1

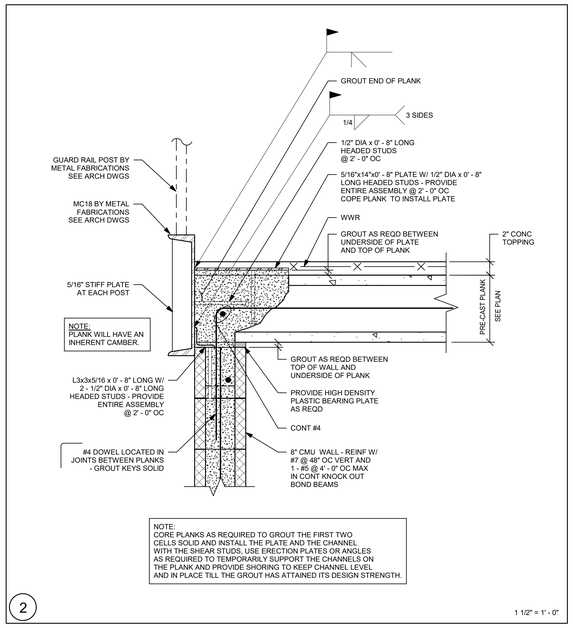

NOTE:
CORE PLANKS AS REQUIRED TO GROUT THE FIRST TWO CELLS SOLID AND INSTALL THE PLATE AND THE CHANNEL WITH THE SHEAR STUDS. USE ERECTION PLATES OR ANGLES AS REQUIRED TO TEMPORARILY SUPPORT THE CHANNELS ON THE PLANK AND PROVIDE SHORING TO KEEP CHANNEL LEVEL AND IN PLACE TILL THE GROUT HAS ATTAINED ITS DESIGN STRENGTH.

1 1/2" = 1' - 0"

2

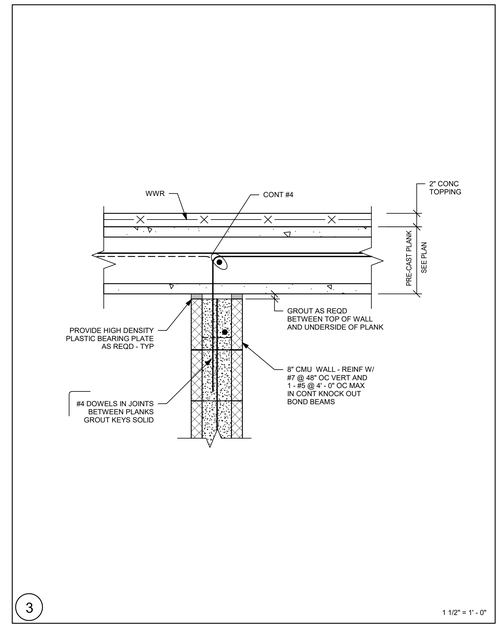

1 1/2" = 1' - 0"

3

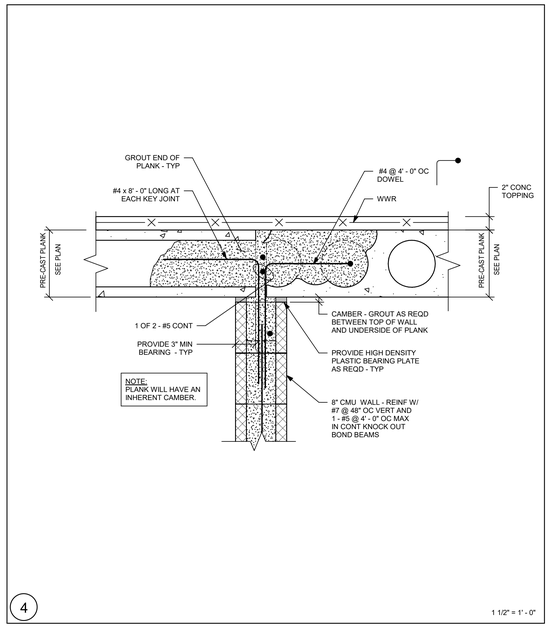

1 1/2" = 1' - 0"

4

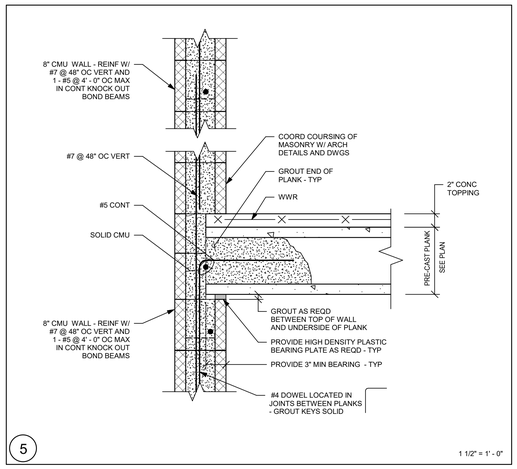

1 1/2" = 1' - 0"

5

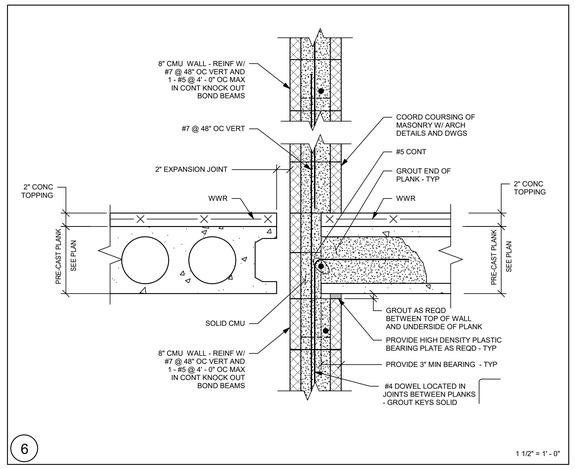

1 1/2" = 1' - 0"

6

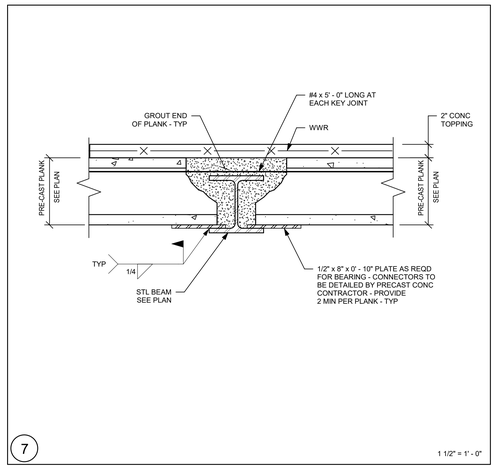

1 1/2" = 1' - 0"

7

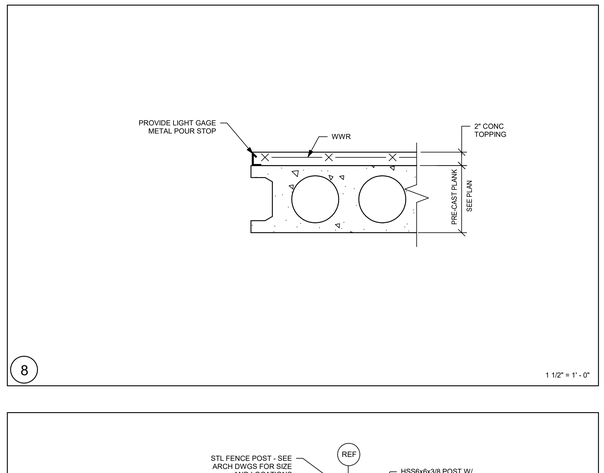

1 1/2" = 1' - 0"

8

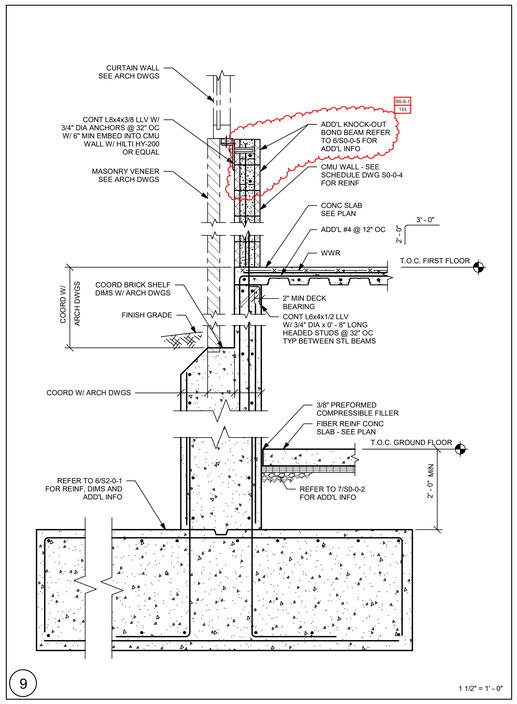

1 1/2" = 1' - 0"

9

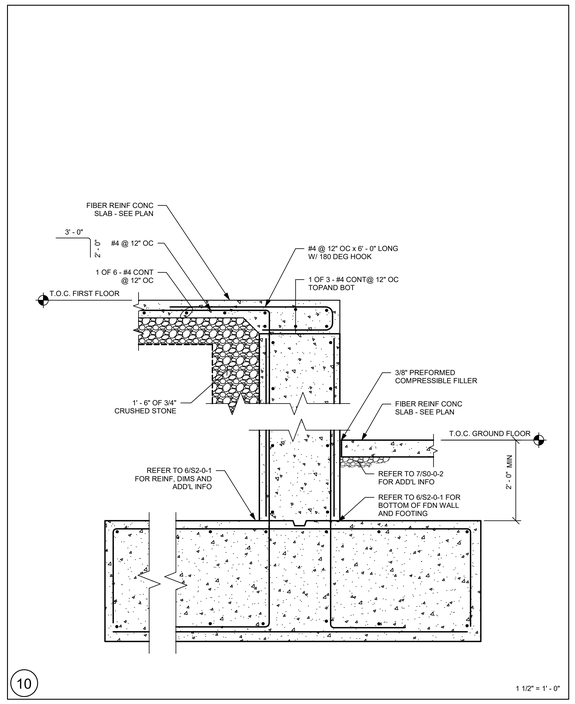

1 1/2" = 1' - 0"

10

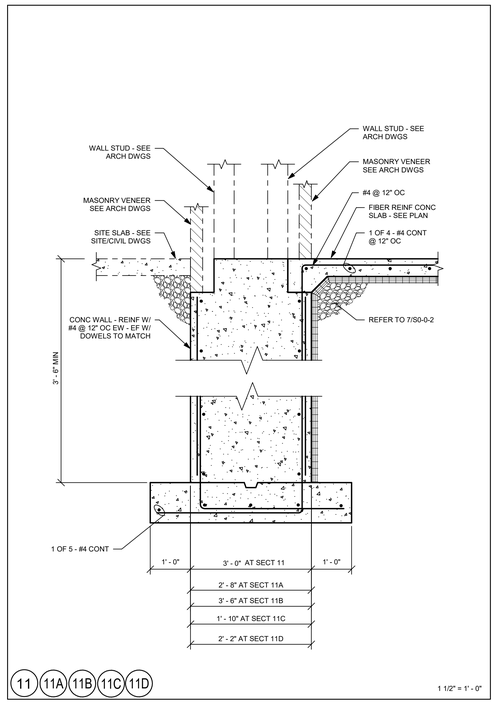

1 1/2" = 1' - 0"

11 11A 11B 11C 11D

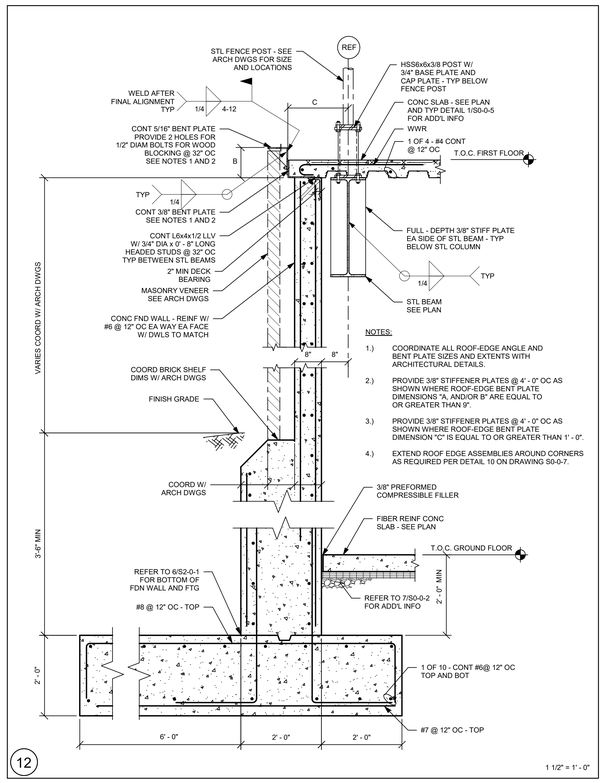

NOTES:

1.) COORDINATE ALL ROOF-EDGE ANGLE AND BENT PLATE SIZES AND EXTENTS WITH ARCHITECTURAL DETAILS.

2.) PROVIDE 3/8" STIFFENER PLATES @ 4' - 0" OC AS SHOWN WHERE ROOF-EDGE BENT PLATE DIMENSIONS "A, AND/OR B" ARE EQUAL TO OR GREATER THAN 9".

3.) PROVIDE 3/8" STIFFENER PLATES @ 4' - 0" OC AS SHOWN WHERE ROOF-EDGE BENT PLATE DIMENSION "C" IS EQUAL TO OR GREATER THAN 1' - 0".

4.) EXTEND ROOF EDGE ASSEMBLIES AROUND CORNERS AS REQUIRED PER DETAIL 10 ON DRAWING S0-0-7.

1 1/2" = 1' - 0"

12

DRA

Drummey Rosane Anderson, Inc.

225 Oakland Road
Studio 205
South Windsor, CT
06074

260 Charles Street
Studio 300
Waltham, MA
02453

Planning | Architecture | Interior Design

Tel: 617-964-1700
www.draiwa.com

NORTHEAST METRO TECH

100 Hemlock Rd,
Wakefield, MA 01880

EDG
Engineers Design Group Inc.
Structural Engineers
389 Main Street, Suite 401
Malden, MA 02148
(781)396-9007
EDG@EDGINC.COM

REVISION LIST

SS-S-1	4/14/2023	STRUCTURAL STEEL ADDENDUM 1

© COPYRIGHT 2021 DRUMMEY ROSANE ANDERSON, INC.

FOR REFERENCE ONLY
SCOPE OF WORK ON THIS DRAWING IS A PART OF EARLY STRUCTURAL BID PACKAGE

MSBA 90% CD SUBMISSION

MAY 12, 2023

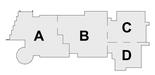

KEY PLAN

PROJECT NORTH

MAGNETIC NORTH

SECTIONS

Scale: As indicated
Job No.: 20202
Drawn By: EDG
Date: MAY 12, 2023

S2-0-3

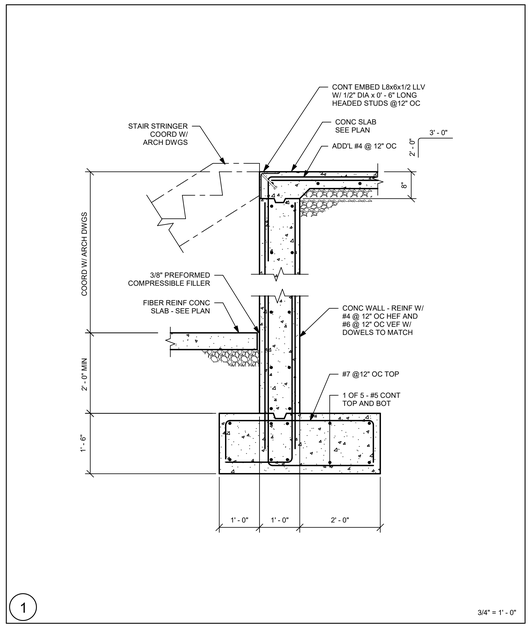

1

3/4" = 1' - 0"

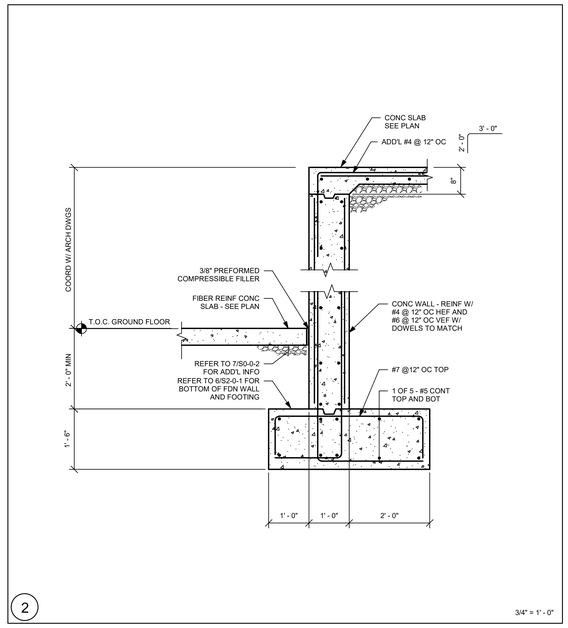

2

3/4" = 1' - 0"

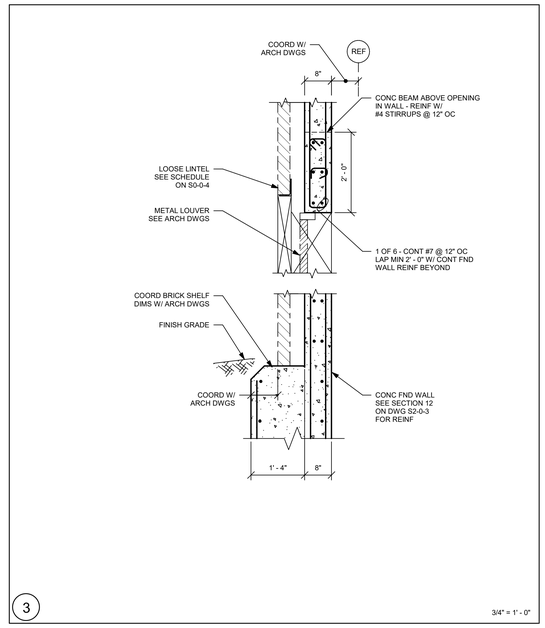

3

3/4" = 1' - 0"

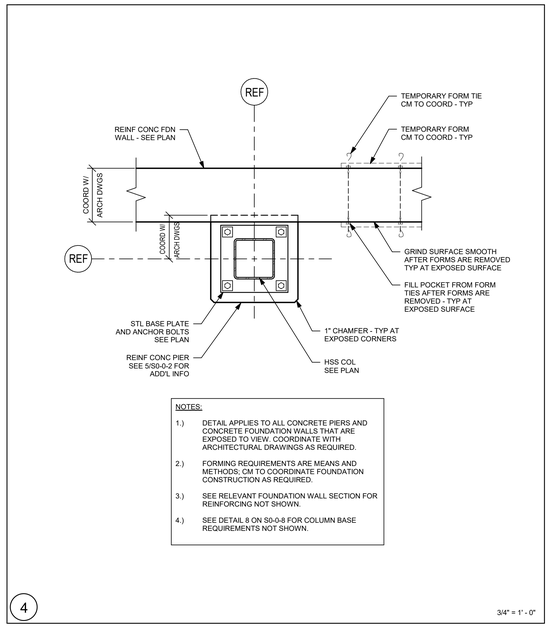

NOTES:

1.) DETAIL APPLIES TO ALL CONCRETE PIERS AND CONCRETE FOUNDATION WALLS THAT ARE EXPOSED TO VIEW. COORDINATE WITH ARCHITECTURAL DRAWINGS AS REQUIRED.

2.) FORMING REQUIREMENTS ARE MEANS AND METHODS; CM TO COORDINATE FOUNDATION CONSTRUCTION AS REQUIRED.

3.) SEE RELEVANT FOUNDATION WALL SECTION FOR REINFORCING NOT SHOWN.

4.) SEE DETAIL 8 ON S0-0-8 FOR COLUMN BASE REQUIREMENTS NOT SHOWN.

4

3/4" = 1' - 0"

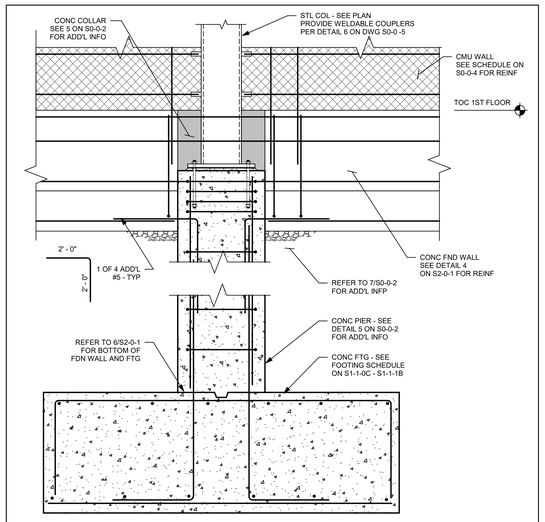

5

3/4" = 1' - 0"

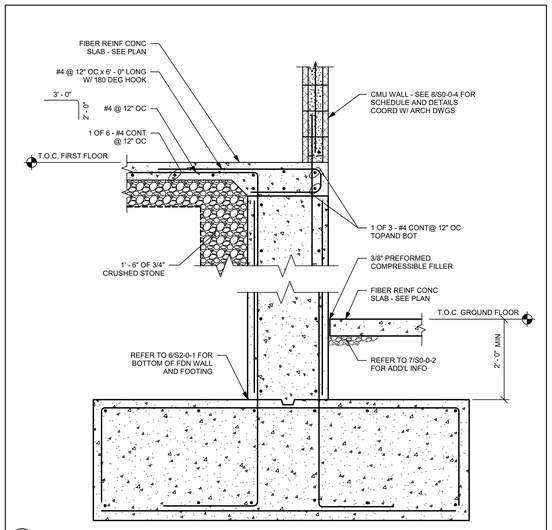

6

3/4" = 1' - 0"

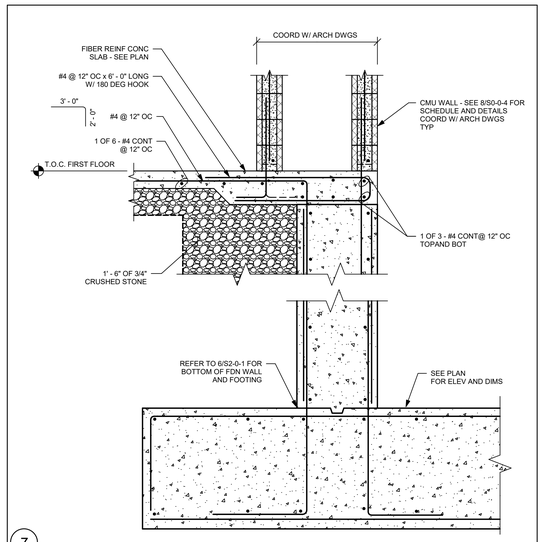

7

3/4" = 1' - 0"

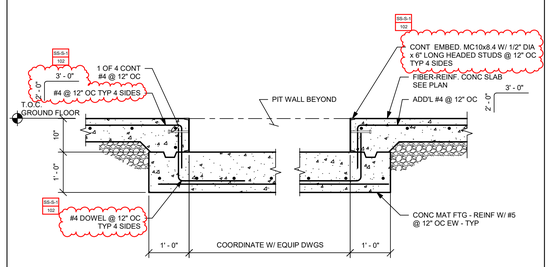

8

3/4" = 1' - 0"

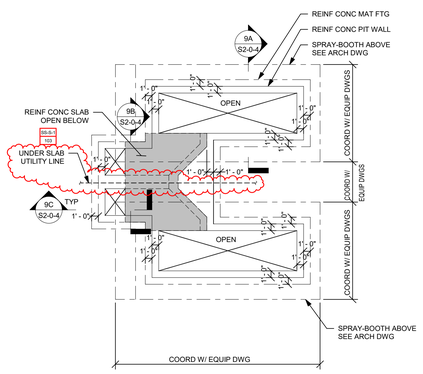

NOTES:

1.) SEE APPLICABLE SECTIONS FOR PIT REINFORCING.

2.) EMBEDDED STEEL SECTIONS ARE TO BE INSTALLED UNDER SPECIFICATION 033000.

3.) COORDINATE WITH ARCHITECTURAL DRAWINGS AND EQUIPMENT DRAWINGS FOR SIZE, DEPTH, AND LOCATIONS.

9

1/8" = 1' - 0"

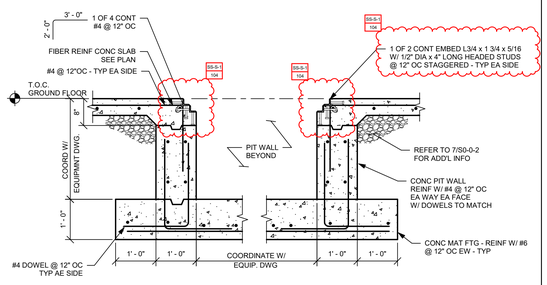

NOTE:

COORDINATE INSTALLATION OF EMBEDED ANGLES WITH EQUIPMENT MANUFACTURER.

SS-S-1 104

9A

3/4" = 1' - 0"

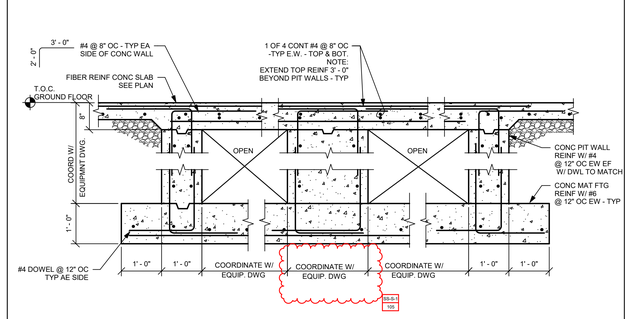

NOTES:

1.) PROVIDE ADDITIONAL FOUNDATION WALL REINFORCING AT UNDERSLAB UTILITY LINES PER DETAIL 4 ON S0-0-4.

2.) COORDINATE LOCATION OF UNDERSLAB UTILITY LINE WITH EQUIPMENT DRAWINGS AND PLUMBING DRAWINGS.

SS-S-1 105

9B

3/4" = 1' - 0"

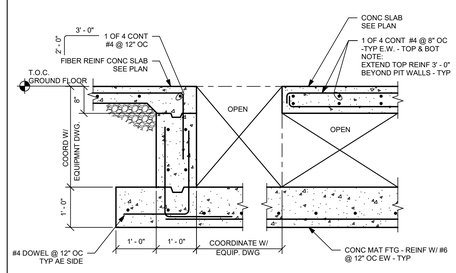

9C

3/4" = 1' - 0"

DRA

Drummey Rosane Anderson, Inc.

225 Oakland Road
Studio 205
South Windsor, CT
06074

260 Charles Street
Studio 300
Waltham, MA
02453

Planning | Architecture | Interior Design

Tel: 617-964-1700
www.draiwa.com

NORTHEAST METRO TECH

100 Hemlock Rd,
Wakefield, MA 01880

EDG

Engineers Design Group Inc.
Structural Engineers
389 Main Street, Suite 401
Malden, MA 02148
(781)396-9007
EDG@EDGINC.COM

REVISION LIST

SS-S-1	4/14/2023	STRUCTURAL STEEL ADDENDUM 1

FOR REFERENCE ONLY
SCOPE OF WORK ON THIS DRAWING IS A PART OF EARLY STRUCTURAL BID PACKAGE

© COPYRIGHT 2021 DRUMMEY ROSANE ANDERSON, INC.

MSBA 90% CD SUBMISSION

MAY 12, 2023

KEY PLAN

PROJECT NORTH

MAGNETIC NORTH

SECTIONS

Scale: As indicated
Job No.: 20202
Drawn By: EDG
Date: MAY 12, 2023

S2-0-4

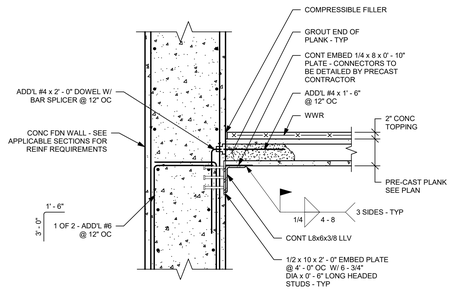

1

3/4" = 1' - 0"

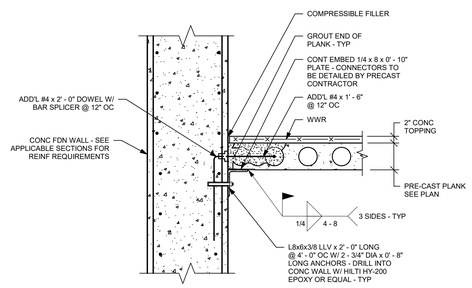

2

3/4" = 1' - 0"

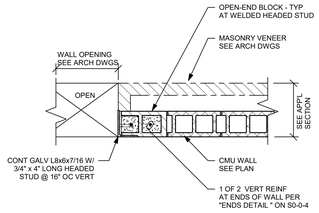

NOTES:

1.) STEEL ANGLE TO BE FURNISHED UNDER SPECIFICATION 055000 AND INSTALLED UNDER SPECIFICATION 042000.

2.) COORDINATE QUANTITIES WITH MASONRY OPENINGS SHOWN ON ARCHITECTURAL DRAWINGS.

3.) REFER TO SCHEDULE AND TYPICAL REINFORCING ARRANGEMENTS ON DETAIL 8 ON S0-0-4 FOR ADDITIONAL INFORMATION.

3

3/4" = 1' - 0"

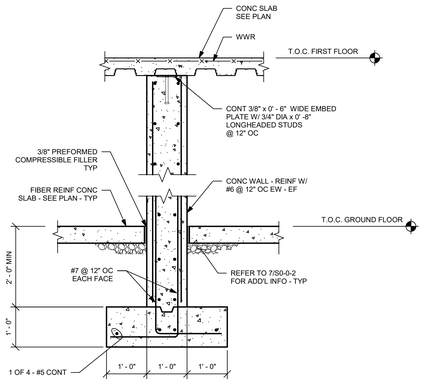

4

3/4" = 1' - 0"

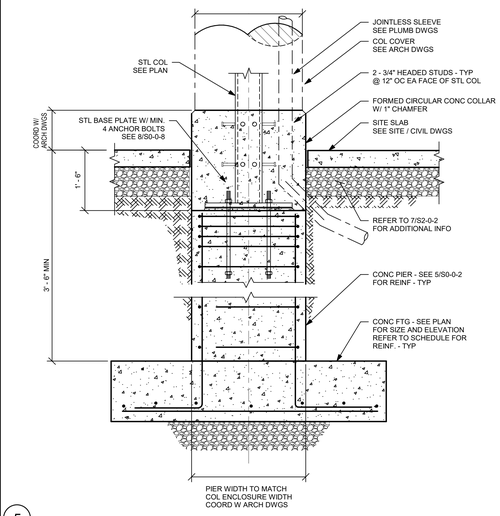

5

3/4" = 1' - 0"

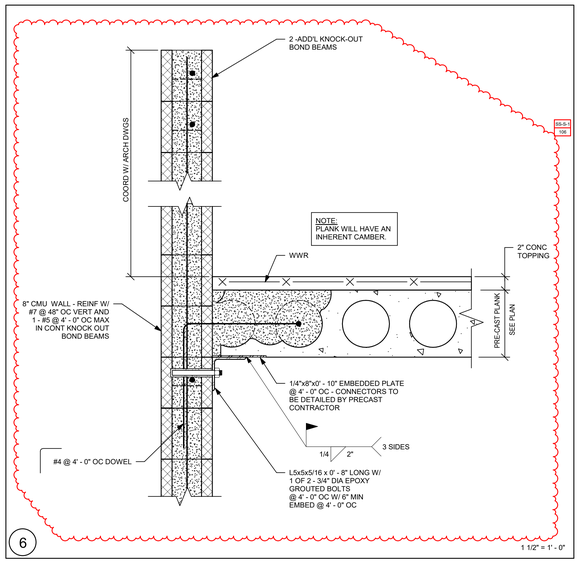

6

1 1/2" = 1' - 0"

7

1 1/2" = 1' - 0"

8

1 1/2" = 1' - 0"

9

1 1/2" = 1' - 0"

10

1 1/2" = 1' - 0"

11

1 1/2" = 1' - 0"

12

1 1/2" = 1' - 0"

DRA

Drummey Rosane Anderson, Inc.

225 Oakland Road
Studio 205
South Windsor, CT
06074

260 Charles Street
Studio 300
Waltham, MA
02453

Planning | Architecture | Interior Design

Tel: 617.964.1700
www.draiwa.com

NORTHEAST METRO TECH

100 Hemlock Rd,
Wakefield, MA 01880

EDG

Engineers Design Group Inc.
Structural Engineers
389 Main Street, Suite 401
Malden, MA 02148
(781)396-9007
EDG@EDGINC.COM

REVISION LIST

SS-S-1	4/14/2023	STRUCTURAL STEEL ADDENDUM 1

FOR REFERENCE ONLY
SCOPE OF WORK ON THIS DRAWING IS A PART OF EARLY STRUCTURAL BID PACKAGE

© COPYRIGHT 2021 DRUMMEY ROSANE ANDERSON, INC.

MSBA 90% CD SUBMISSION

MAY 12, 2023

KEY PLAN

PROJECT NORTH

MAGNETIC NORTH

SECTIONS

Scale: As indicated
Job No.: 20202
Drawn By: EDG
Date: MAY 12, 2023

S2-0-5

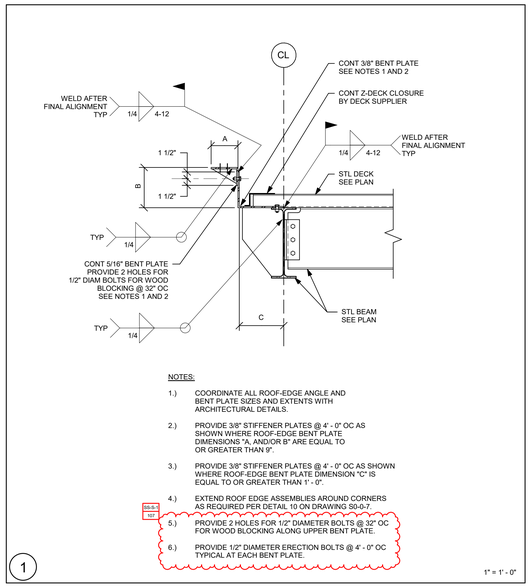

NOTES:

1.) COORDINATE ALL ROOF-EDGE ANGLE AND BENT PLATE SIZES AND EXTENTS WITH ARCHITECTURAL DETAILS.

2.) PROVIDE 3/8" STIFFENER PLATES @ 4' - 0" OC AS SHOWN WHERE ROOF-EDGE BENT PLATE DIMENSIONS "A, AND/OR B" ARE EQUAL TO OR GREATER THAN 9".

3.) PROVIDE 3/8" STIFFENER PLATES @ 4' - 0" OC AS SHOWN WHERE ROOF-EDGE BENT PLATE DIMENSION "C" IS EQUAL TO OR GREATER THAN 1' - 0".

4.) EXTEND ROOF EDGE ASSEMBLIES AROUND CORNERS AS REQUIRED PER DETAIL 10 ON DRAWING S0-0-7.

SS-S-107

5.) PROVIDE 2 HOLES FOR 1/2" DIAMETER BOLTS @ 32" OC FOR WOOD BLOCKING ALONG UPPER BENT PLATE.

6.) PROVIDE 1/2" DIAMETER ERECTION BOLTS @ 4' - 0" OC TYPICAL AT EACH BENT PLATE.

1 — 1" = 1' - 0"

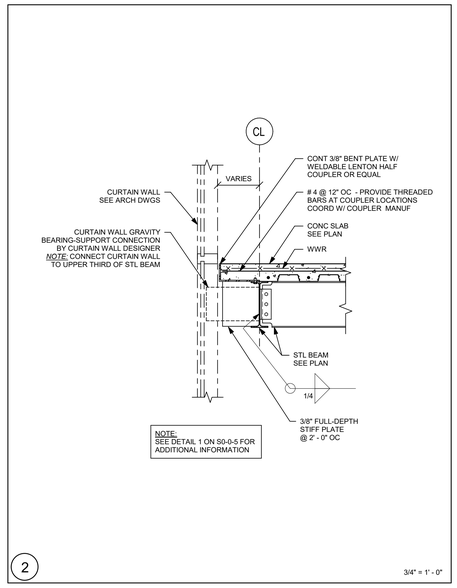

2 — 3/4" = 1' - 0"

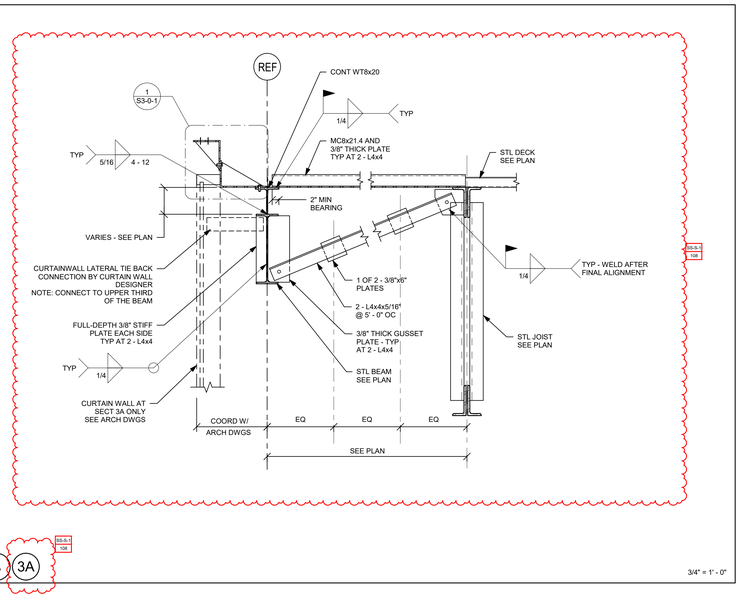

3 3A — 3/4" = 1' - 0"

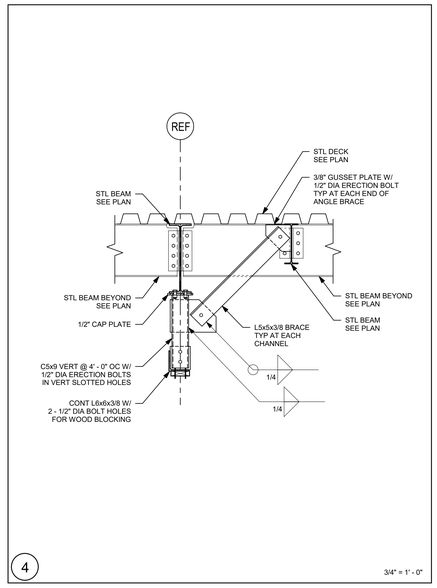

4 — 3/4" = 1' - 0"

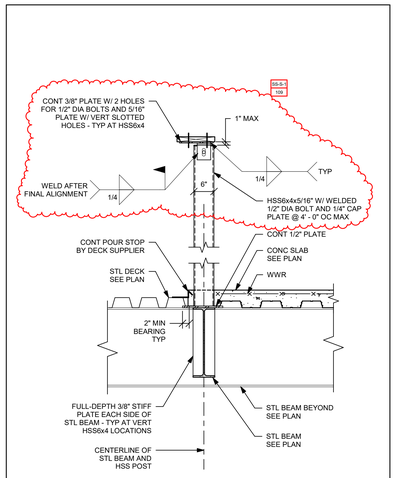

5 — 3/4" = 1' - 0"

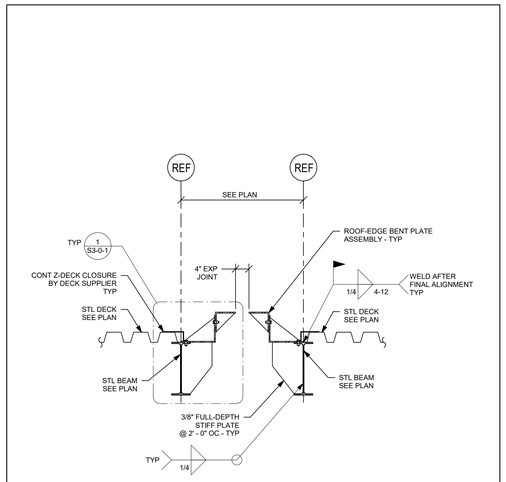

6 — 3/4" = 1' - 0"

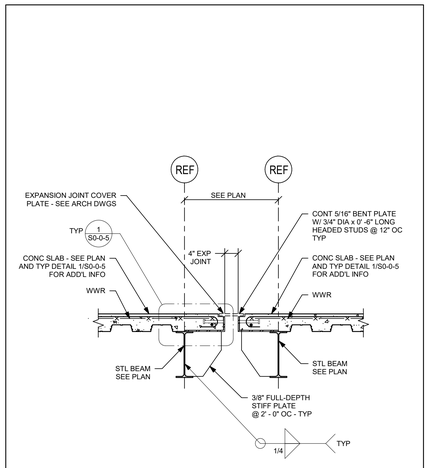

7 — 3/4" = 1' - 0"

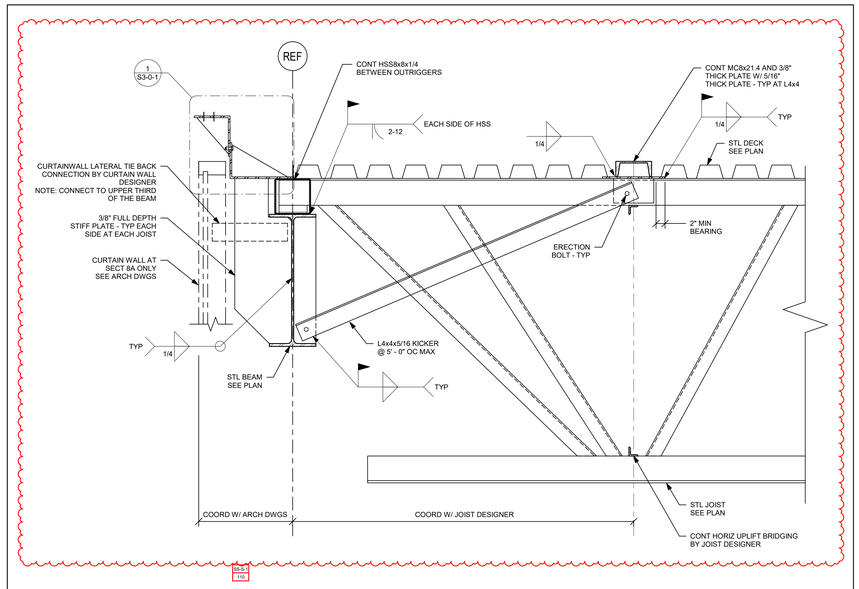

8 8A — 1" = 1' - 0"

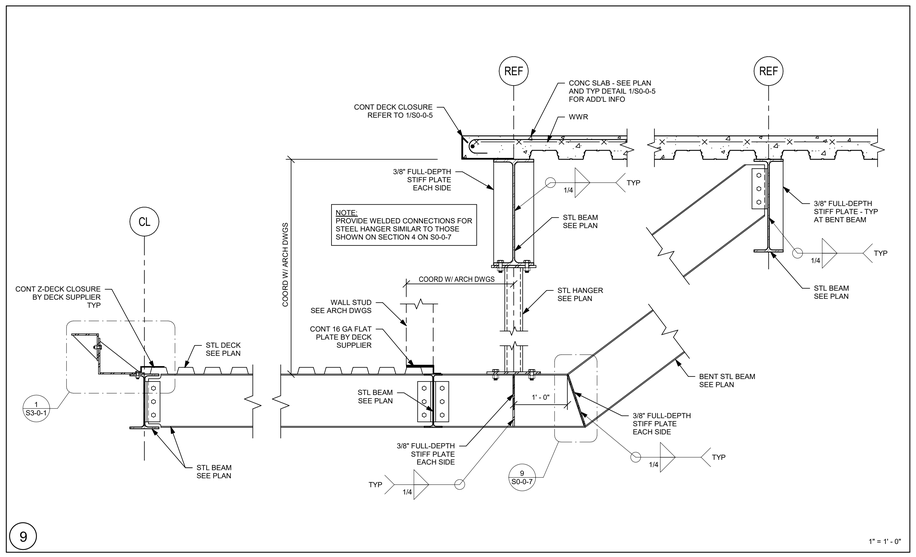

9 — 1" = 1' - 0"

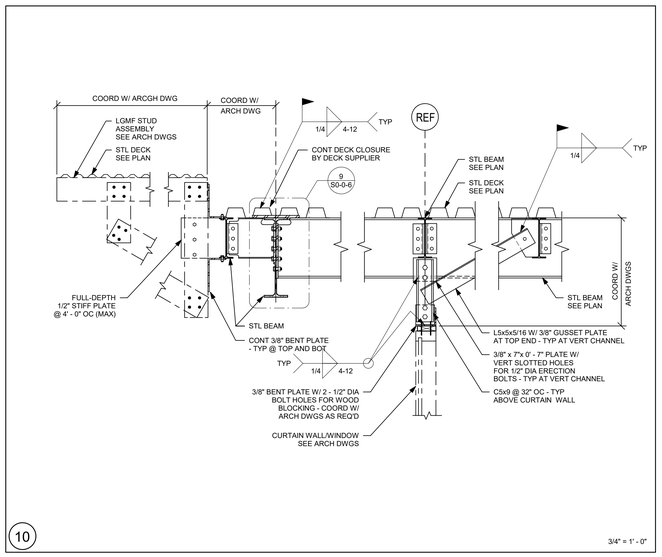

10 — 3/4" = 1' - 0"

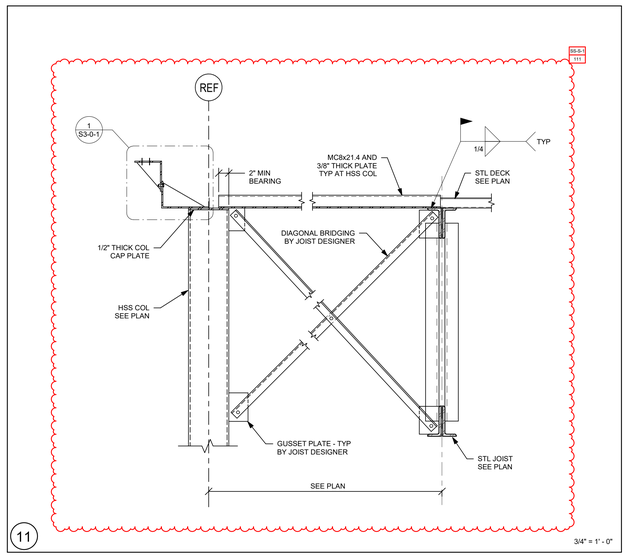

11 — 3/4" = 1' - 0"

DRA

Drummey Rosane Anderson, Inc.

225 Oakland Road
Studio 205
South Windsor, CT
06074

260 Charles Street
Studio 300
Waltham, MA
02453

Planning | Architecture | Interior Design

Tel: 617.964.1700
www.draiwa.com

NORTHEAST METRO TECH

100 Hemlock Rd,
Wakefield, MA 01880

EDG

Engineers Design Group Inc.
Structural Engineers
389 Main Street, Suite 401
Malden, MA 02148
(781)396-9007
EDG@EDGINC.COM

REVISION LIST

SS-S-1	4/14/2023	STRUCTURAL STEEL ADDENDUM 1

FOR REFERENCE ONLY
SCOPE OF WORK ON THIS DRAWING IS A PART OF EARLY STRUCTURAL BID PACKAGE

© COPYRIGHT 2021 DRUMMEY ROSANE ANDERSON, INC.

MSBA 90% CD SUBMISSION

MAY 12, 2023

KEY PLAN

PROJECT NORTH

MAGNETIC NORTH

SECTIONS

Scale: As indicated
Job No.: 20202
Drawn By: EDG
Date: MAY 12, 2023

S3-0-1

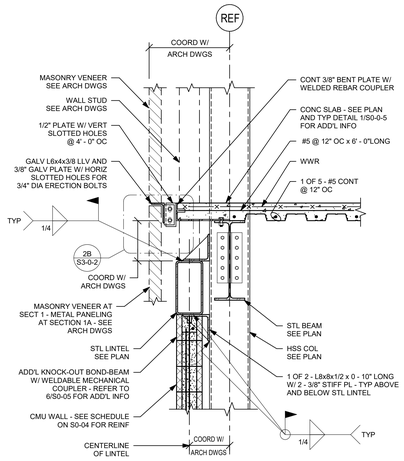

NOTE:
SEE DETAIL 5 ON S3-0-7 FOR HSS BEAM-TO-COLUMN CONNECTION REQUIREMENTS.

1 1A

3/4" = 1' - 0"

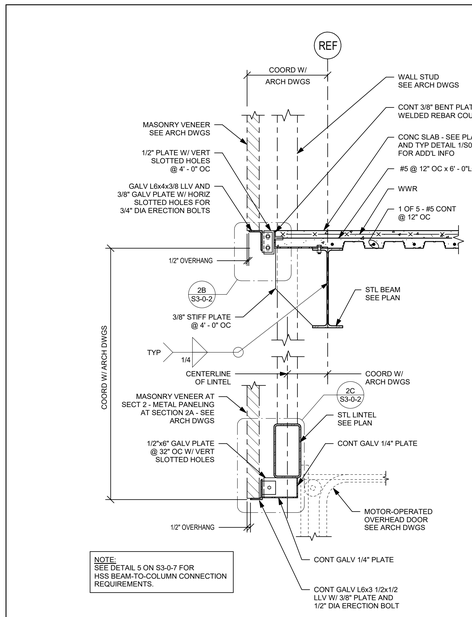

NOTE:
SEE DETAIL 5 ON S3-0-7 FOR HSS BEAM-TO-COLUMN CONNECTION REQUIREMENTS.

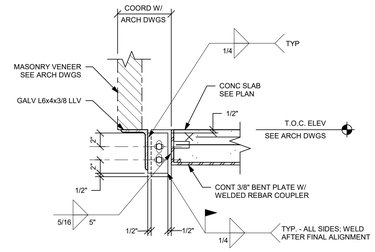

NOTE:
TOP, BOTTOM, AND SIDE OF 3/8" PLATE ARE TO REMAIN UNGALVANIZED TO ALLOW FOR FIELD WELDED CONNECTIONS TO 1/2" PLATE.

DETAIL 2B

NO SCALE

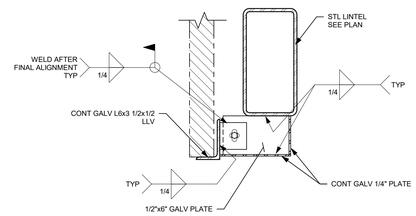

DETAIL 2C

NO SCALE

2 2A

3/4" = 1' - 0"

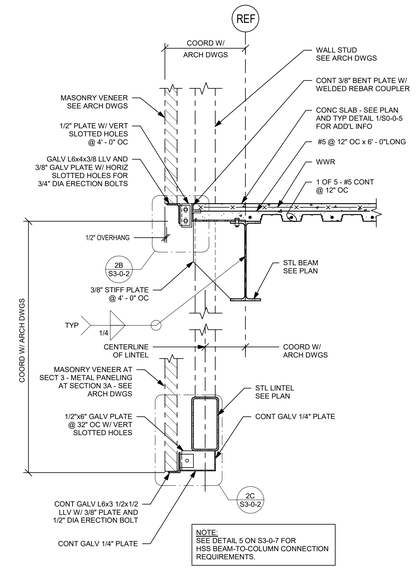

NOTE:
SEE DETAIL 5 ON S3-0-7 FOR HSS BEAM-TO-COLUMN CONNECTION REQUIREMENTS.

3 3A

3/4" = 1' - 0"

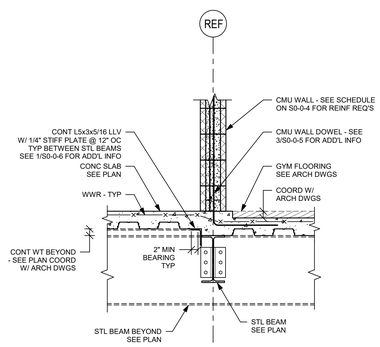

4

3/4" = 1' - 0"

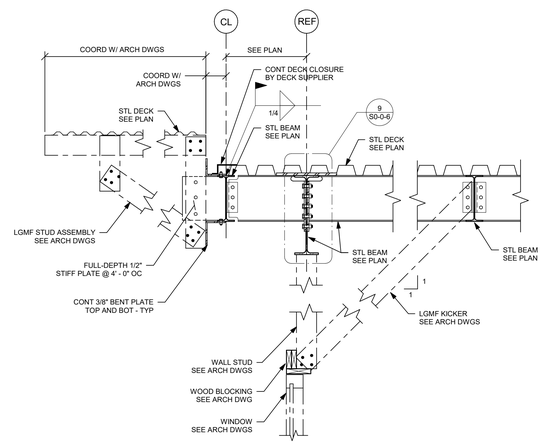

5

3/4" = 1' - 0"

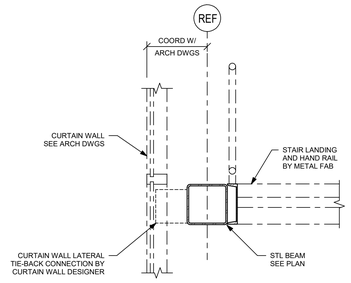

6

3/4" = 1' - 0"

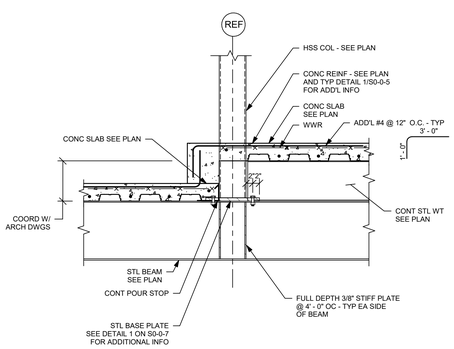

7

3/4" = 1' - 0"

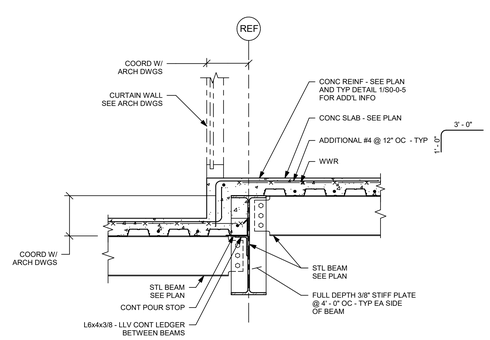

8

3/4" = 1' - 0"

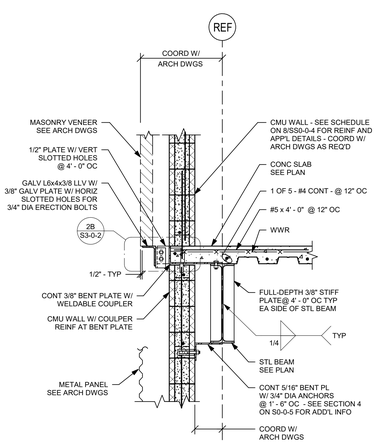

9

3/4" = 1' - 0"

DRA

Drummey Rosane Anderson, Inc.

225 Oakland Road
Studio 205
South Windsor, CT
06074

260 Charles Street
Studio 300
Waltham, MA
02453

Planning | Architecture | Interior Design

Tel: 617.964.1700
www.draiwa.com

NORTHEAST METRO TECH

100 Hemlock Rd,
Wakefield, MA 01880

EDG
Engineers Design Group Inc.
Structural Engineers
389 Main Street, Suite 401
Malden, MA 02148
(781)396-9007
EDG@EDGINC.COM

REVISION LIST

FOR REFERENCE ONLY
SCOPE OF WORK ON THIS DRAWING IS A PART OF EARLY STRUCTURAL BID PACKAGE

© COPYRIGHT 2021 DRUMMEY ROSANE ANDERSON, INC.

MSBA 90% CD SUBMISSION

MAY 12, 2023

KEY PLAN

PROJECT NORTH

MAGNETIC NORTH

SECTIONS

Scale: As indicated
Job No.: 20202
Drawn By: EDG
Date: MAY 12, 2023

S3-0-2

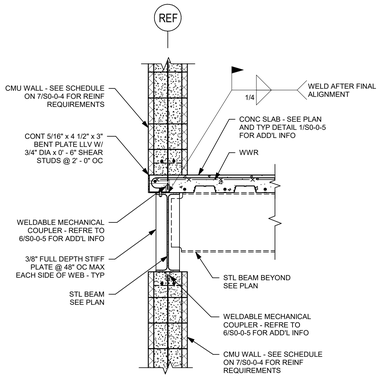

NOTES:

1.) COORDINATE SLAB-EDGE REINFORCING WITH DETAIL 1 ON DRAWING S0-0-5.

2.) SEE PLAN FOR NUMBER OF SHEAR STUDS REQUIRED AT STEEL BEAMS.

1 — 3/4" = 1' - 0"

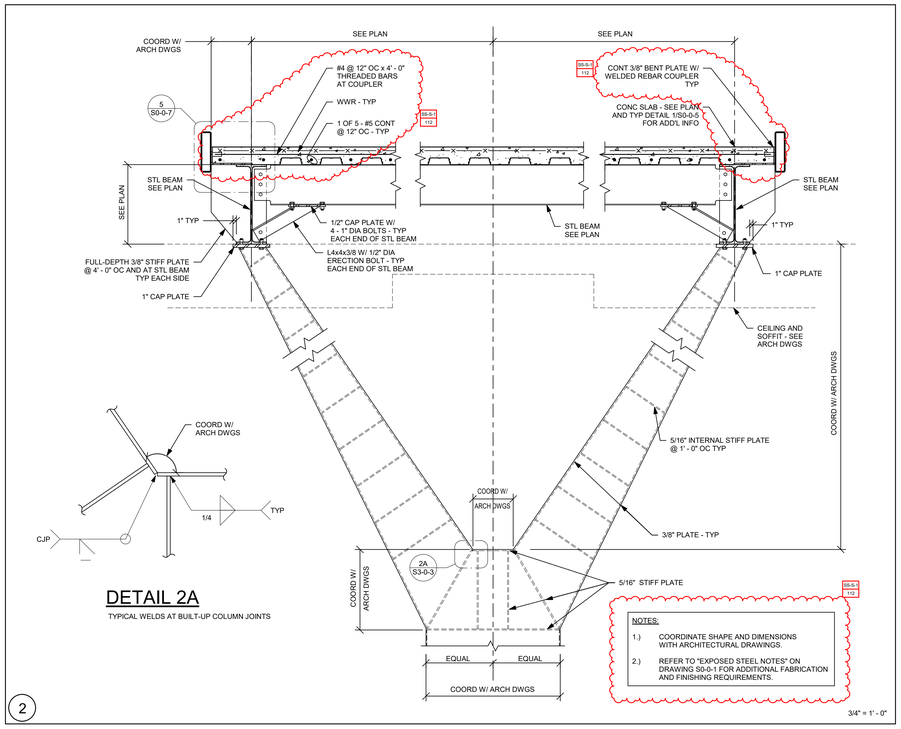

DETAIL 2A

TYPICAL WELDS AT BUILT-UP COLUMN JOINTS

NOTES:

1.) COORDINATE SHAPE AND DIMENSIONS WITH ARCHITECTURAL DRAWINGS.

2.) REFER TO "EXPOSED STEEL NOTES" ON DRAWING S0-0-1 FOR ADDITIONAL FABRICATION AND FINISHING REQUIREMENTS.

SS-S-1 1/2

2 — 3/4" = 1' - 0"

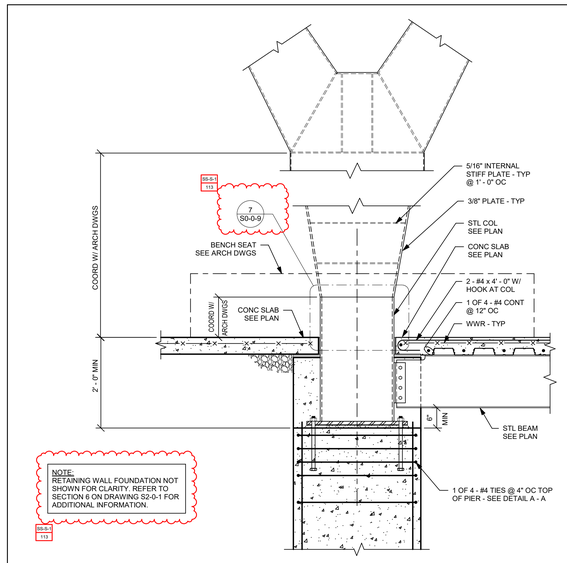

NOTE:
RETAINING WALL FOUNDATION NOT SHOWN FOR CLARITY. REFER TO SECTION 6 ON DRAWING S2-0-1 FOR ADDITIONAL INFORMATION.

SS-S-1 1/2

TYPICAL BUILT - UP COLUMN SECTION

NOTES:

1.) COORDINATE SHAPE AND DIMENSIONS WITH ARCHITECTURAL DRAWINGS.

2.) REFER TO "EXPOSED STEEL NOTES" ON DRAWING S0-0-1 FOR ADDITIONAL FABRICATION AND FINISHING REQUIREMENTS.

SS-S-1 1/2

3 — 3/4" = 1' - 0"

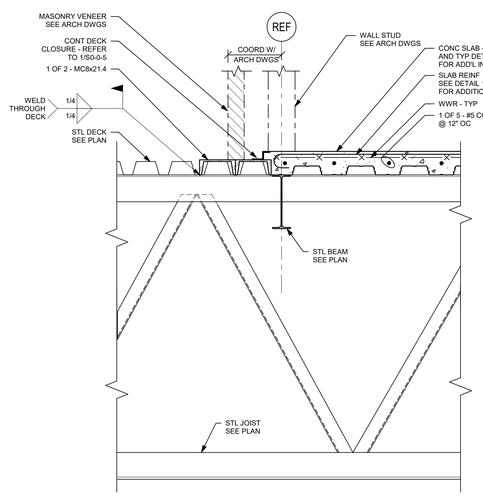

4 — 1" = 1' - 0"

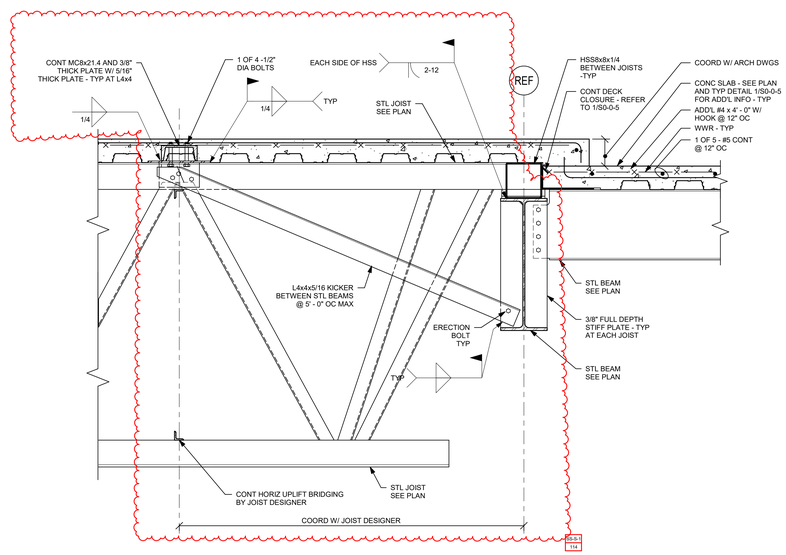

5 — 1" = 1' - 0"

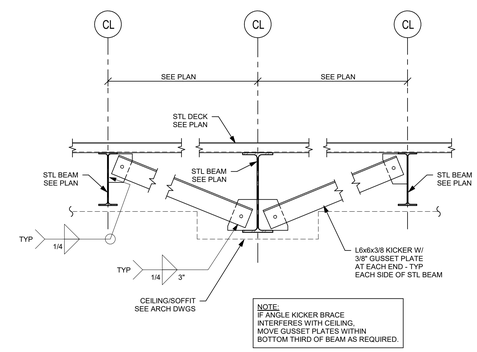

NOTE:
IF ANGLE KICKER BRACE INTERFERES WITH CEILING, MOVE GUSSET PLATES WITHIN BOTTOM THIRD OF BEAM AS REQUIRED.

6 — 3/4" = 1' - 0"

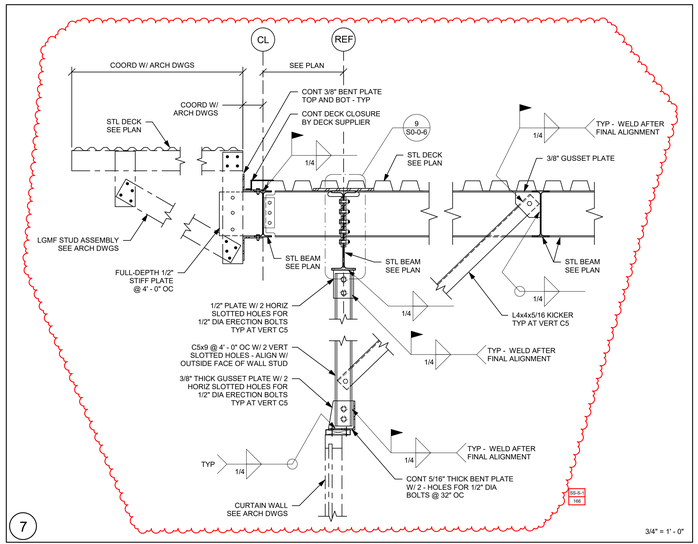

7 — 3/4" = 1' - 0"

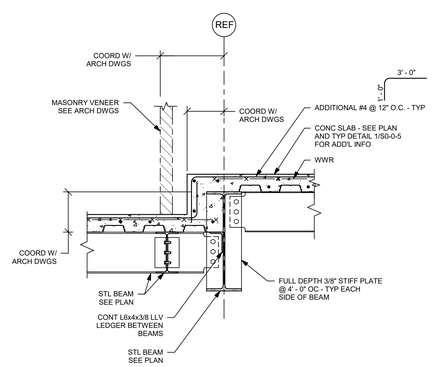

8 — 3/4" = 1' - 0"

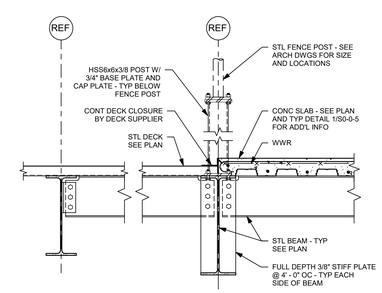

9 — 3/4" = 1' - 0"

DRA

Drummey Rosane Anderson, Inc.

225 Oakland Road
Studio 205
South Windsor, CT
06074

260 Charles Street
Studio 300
Waltham, MA
02453

Planning | Architecture | Interior Design

Tel: 617.964.1700
www.draws.com

NORTHEAST METRO TECH

100 Hemlock Rd,
Wakefield, MA 01880

EDG
Engineers Design Group Inc.
Structural Engineers
389 Main Street, Suite 401
Malden, MA 02148
(781)396-9007
EDG@EDGINC.COM

REVISION LIST

SS-S-1	4/14/2023	STRUCTURAL STEEL ADDENDUM 1

FOR REFERENCE ONLY
SCOPE OF WORK ON THIS DRAWING IS A PART OF EARLY STRUCTURAL BID PACKAGE

© COPYRIGHT 2021 DRUMMEY ROSANE ANDERSON, INC.

MSBA 90% CD SUBMISSION

MAY 12, 2023

KEY PLAN

PROJECT NORTH | MAGNETIC NORTH

SECTIONS

Scale: As indicated
Job No.: 20202
Drawn By: EDG
Date: MAY 12, 2023

S3-0-3

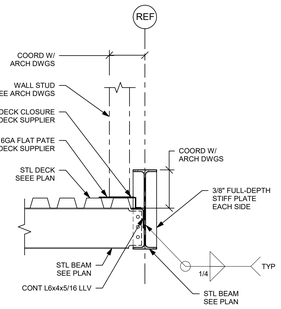

1

3/4" = 1' - 0"

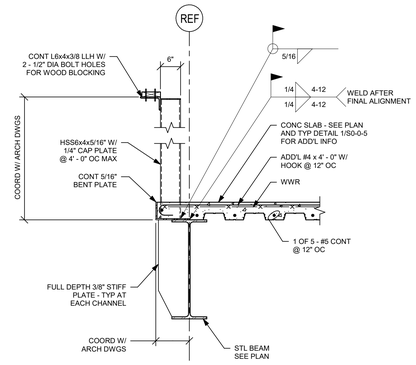

2

3/4" = 1' - 0"

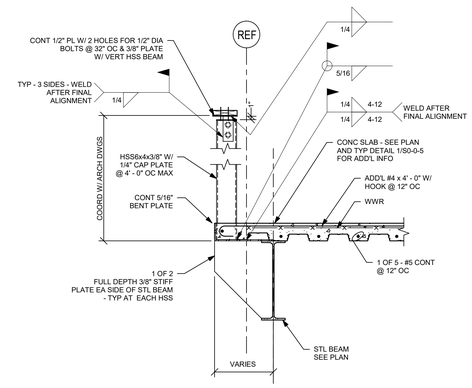

3

3/4" = 1' - 0"

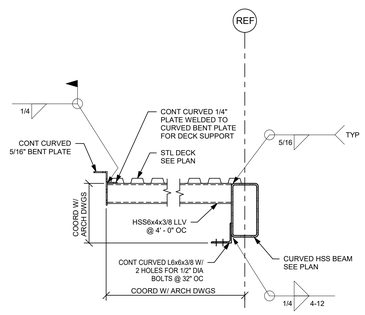

4

3/4" = 1' - 0"

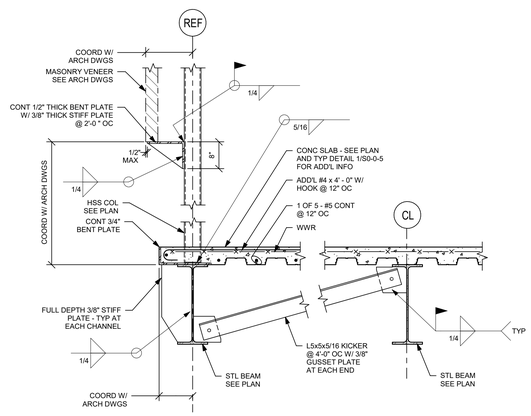

5

3/4" = 1' - 0"

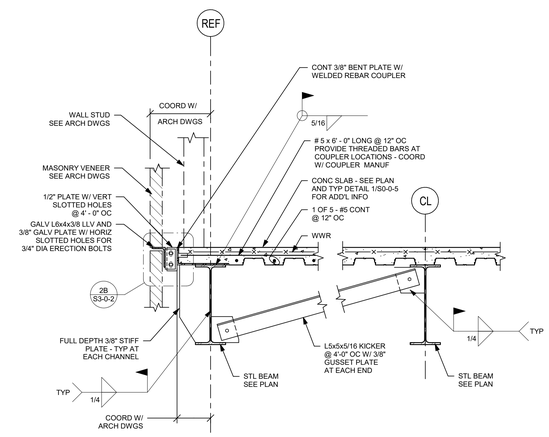

6

3/4" = 1' - 0"

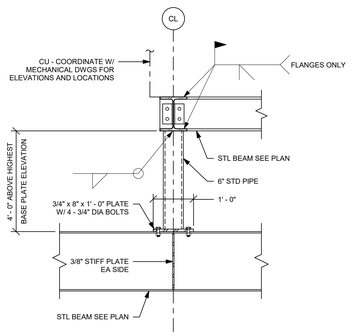

TYPICAL SUPPORT OF ROOF TOP MECHANICAL UNIT DETAIL

NOTES:

1.) ALL EXPOSED STEEL TO BE HOT-DIP GALVANIZED.

2.) TOUCH UP ALL FIELD WELDS WITH ZINC RICH PAINT

7

3/4" = 1' - 0"

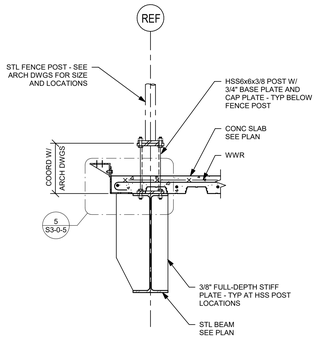

8

3/4" = 1' - 0"

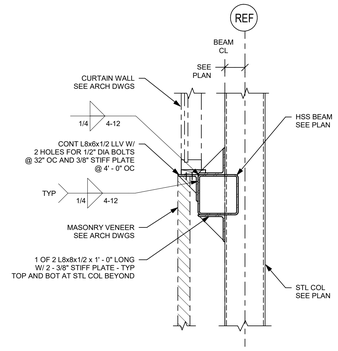

9

3/4" = 1' - 0"

DRA

Drummey Rosane Anderson, Inc.

225 Oakland Road
Studio 205
South Windsor, CT
06074

260 Charles Street
Studio 300
Waltham, MA
02453

Planning | Architecture | Interior Design

Tel: 617.964.1700
www.draiwa.com

NORTHEAST METRO TECH

100 Hemlock Rd,
Wakefield, MA 01880

EDG

Engineers Design Group Inc.
Structural Engineers
389 Main Street, Suite 401
Malden, MA 02148
(781)396-9007
EDG@EDGINC.COM

REVISION LIST

FOR REFERENCE ONLY
SCOPE OF WORK ON THIS DRAWING IS A PART OF EARLY STRUCTURAL BID PACKAGE

© COPYRIGHT 2021 DRUMMEY ROSANE ANDERSON, INC.

MSBA 90% CD SUBMISSION

MAY 12, 2023

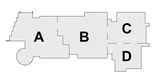

KEY PLAN

PROJECT NORTH

MAGNETIC NORTH

SECTIONS

Scale: 3/4" = 1'-0"
Job No.: 20202
Drawn By: EDG
Date: MAY 12, 2023

S3-0-4

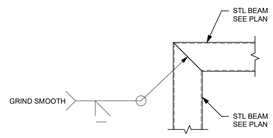

1 3/4" = 1' - 0"

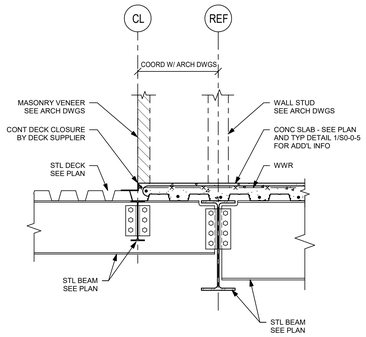

2 3/4" = 1' - 0"

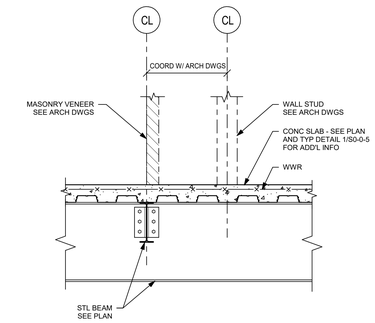

3 3/4" = 1' - 0"

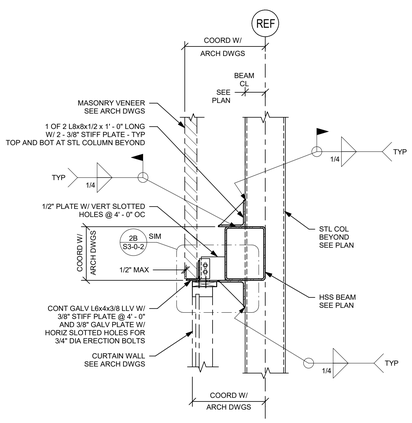

NOTE:
SEE DETAIL 6 ON S3-0-7 FOR HSS BEAM-TO-COLUMN CONNECTION REQUIREMENTS

4 3/4" = 1' - 0"

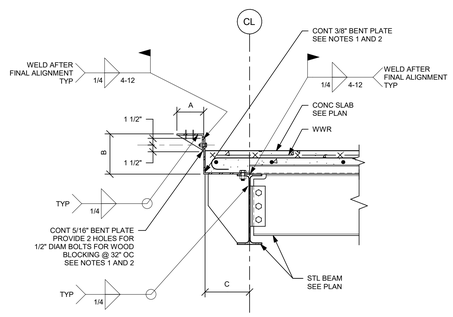

NOTES:

1.) COORDINATE ALL ROOF-EDGE ANGLE AND BENT PLATE SIZES AND EXTENTS WITH ARCHITECTURAL DETAILS.

2.) PROVIDE 3/8" STIFFENER PLATES @ 4' - 0" OC AS SHOWN WHERE ROOF-EDGE BENT PLATE DIMENSIONS "A, AND/OR B" ARE EQUAL TO OR GREATER THAN 9".

3.) PROVIDE 3/8" STIFFENER PLATES @ 4' - 0" OC AS SHOWN WHERE ROOF-EDGE BENT PLATE DIMENSION "C" IS EQUAL TO OR GREATER THAN 1' - 0".

4.) EXTEND ROOF EDGE ASSEMBLIES AROUND CORNERS AS REQUIRED PER DETAIL 10 ON DRAWING S0-0-7.

5 1" = 1' - 0"

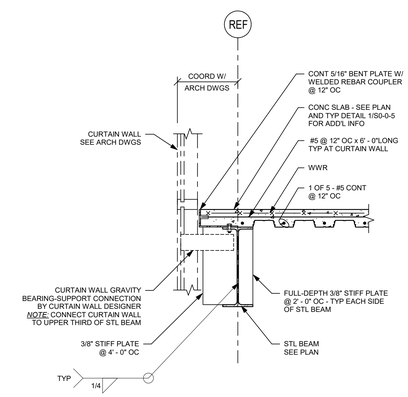

6 3/4" = 1' - 0"

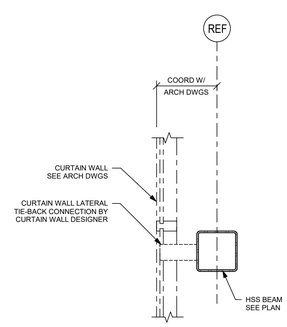

7 3/4" = 1' - 0"

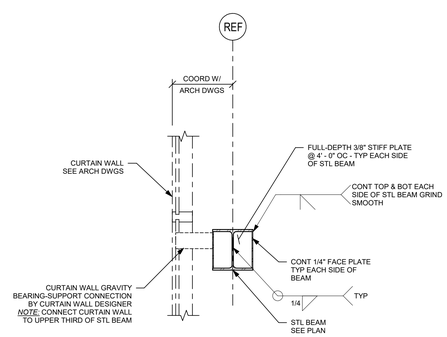

NOTE:
CUT AND GRIND SMOOTH EDGES OF STL BEAM TO REPLICATE CORNERS OF HSS MEMBERS.

8 3/4" = 1' - 0"

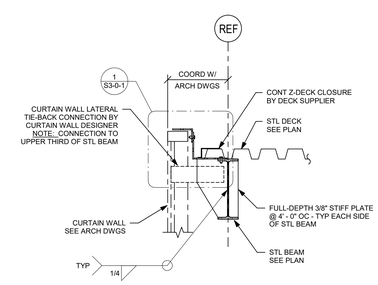

9 3/4" = 1' - 0"

DRA
Drummey Rosane Anderson, Inc.
225 Oakland Road
Studio 205
South Windsor, CT
06074
260 Charles Street
Studio 300
Waltham, MA
02453
Planning | Architecture | Interior Design
Tel: 617.964.1700
www.draiwa.com

NORTHEAST METRO TECH

100 Hemlock Rd,
Wakefield, MA 01880

EDG
Engineers Design Group Inc.
Structural Engineers
389 Main Street, Suite 401
Malden, MA 02148
(781)396-9007
EDG@EDGINC.COM

REVISION LIST

FOR REFERENCE ONLY
SCOPE OF WORK ON THIS DRAWING IS A PART OF EARLY STRUCTURAL BID PACKAGE

© COPYRIGHT 2021 DRUMMEY ROSANE ANDERSON, INC.

MSBA 90% CD SUBMISSION

MAY 12, 2023

KEY PLAN

PROJECT NORTH

MAGNETIC NORTH

SECTIONS

Scale: As indicated
Job No.: 20202
Drawn By: EDG
Date: MAY 12, 2023

S3-0-5

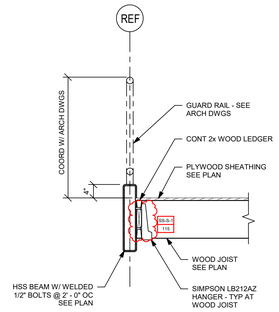

1

3/4" = 1' - 0"

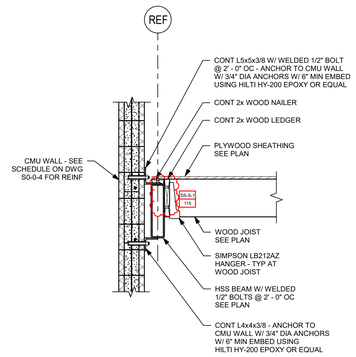

2

3/4" = 1' - 0"

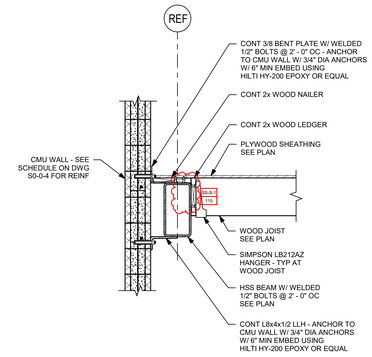

3

3/4" = 1' - 0"

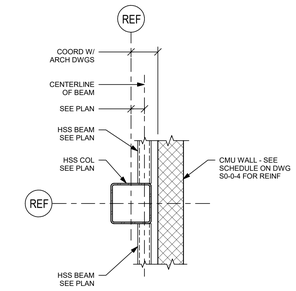

PLAN DETAIL

4

3/4" = 1' - 0"

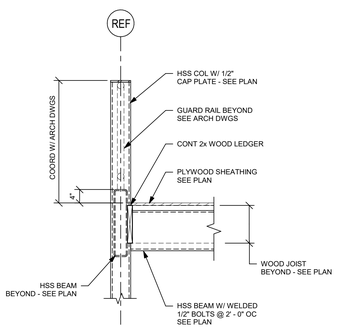

5

3/4" = 1' - 0"

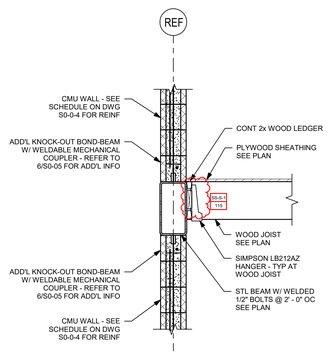

6

3/4" = 1' - 0"

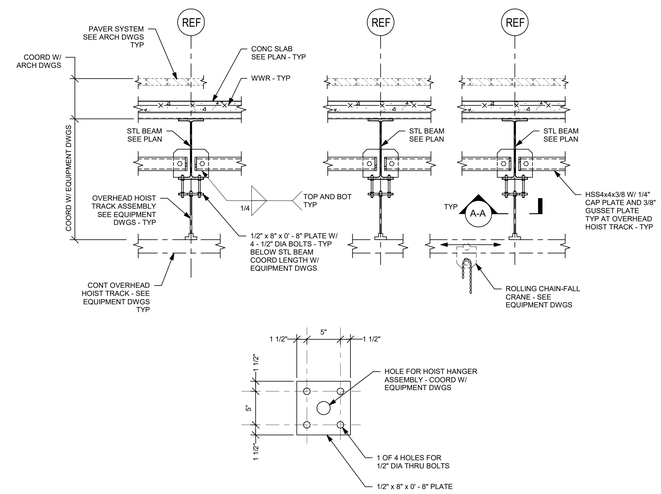

PLATE DETAIL A-A

NO SCALE

7

3/4" = 1' - 0"

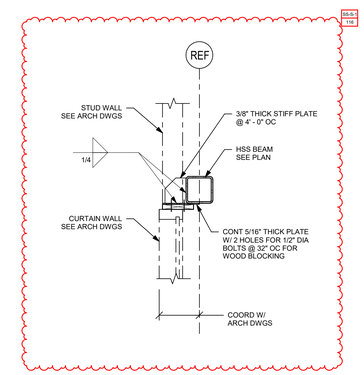

8

3/4" = 1' - 0"

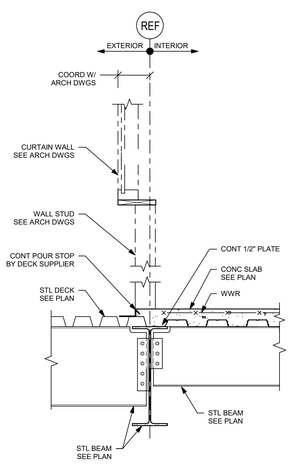

9

3/4" = 1' - 0"

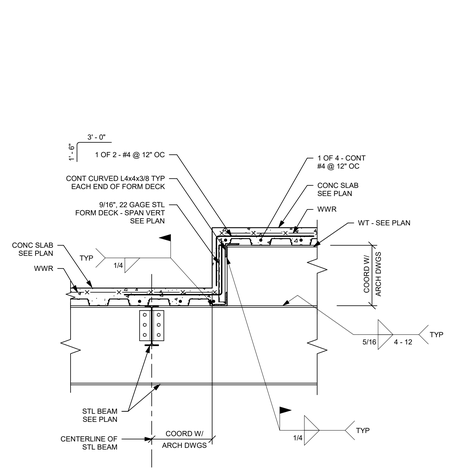

10

3/4" = 1' - 0"

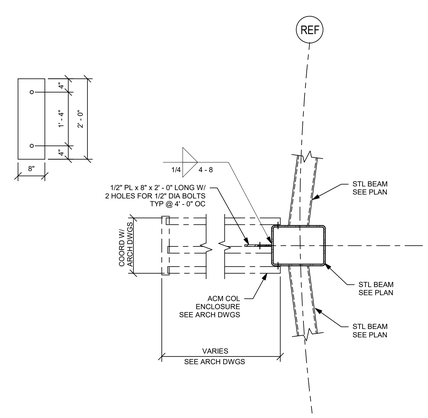

NOTE:

SEE DETAIL 2/S0-0-7 FOR HSS BEAM - TO - HSS COLUMN CONNECTION

11

3/4" = 1' - 0"

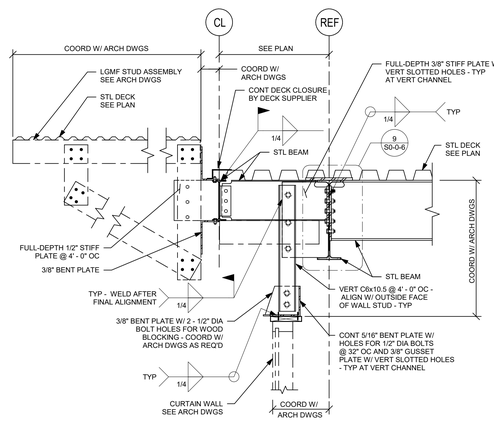

12

3/4" = 1' - 0"

DRA

Drummey Rosane Anderson, Inc.

225 Oakland Road
Studio 205
South Windsor, CT
06074

260 Charles Street
Studio 300
Waltham, MA
02453

Planning | Architecture | Interior Design

Tel: 617.964.1700
www.draiwa.com

NORTHEAST METRO TECH

100 Hemlock Rd,
Wakefield, MA 01880

EDG

Engineers Design Group Inc.
Structural Engineers
389 Main Street, Suite 401
Malden, MA 02148
(781)396-9007
EDG@EDGINC.COM

REVISION LIST

SS-S-1	4/14/2023	STRUCTURAL STEEL ADDENDUM 1

© COPYRIGHT 2021 DRUMMEY ROSANE ANDERSON, INC.

FOR REFERENCE ONLY
SCOPE OF WORK ON THIS DRAWING IS A PART OF EARLY STRUCTURAL BID PACKAGE

MSBA 90% CD SUBMISSION

MAY 12, 2023

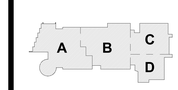

KEY PLAN

PROJECT NORTH

MAGNETIC NORTH

SECTIONS

Scale: As indicated
Job No.: 20202
Drawn By: EDG
Date: MAY 12, 2023

S3-0-6

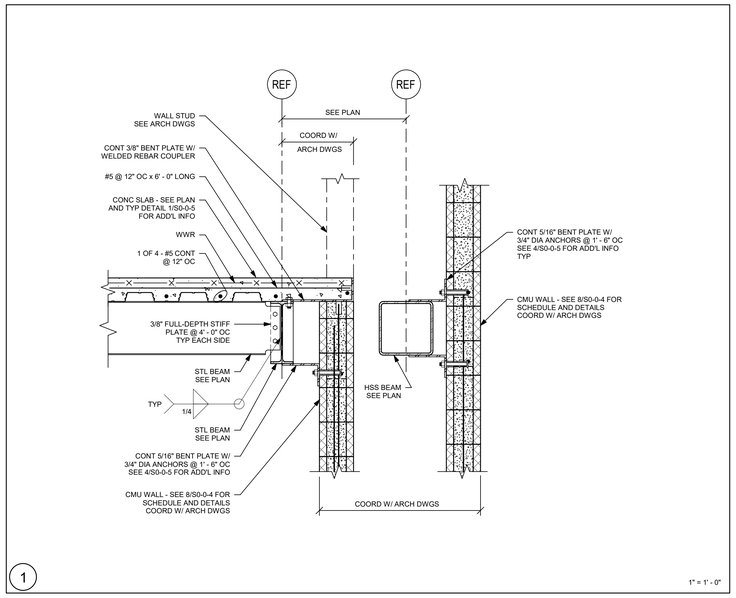

1

1" = 1' - 0"

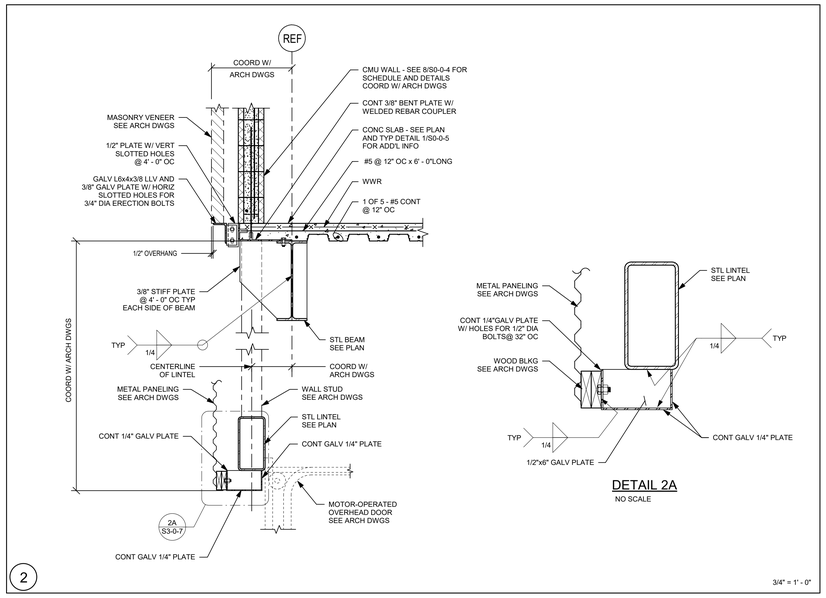

2

3/4" = 1' - 0"

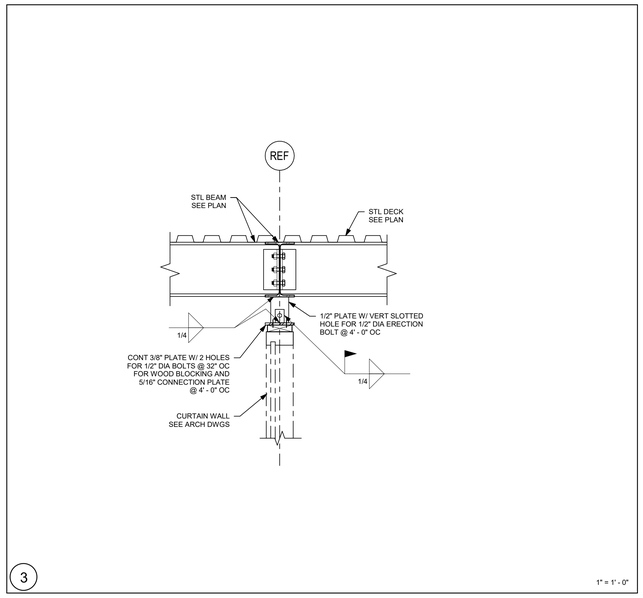

3

1" = 1' - 0"

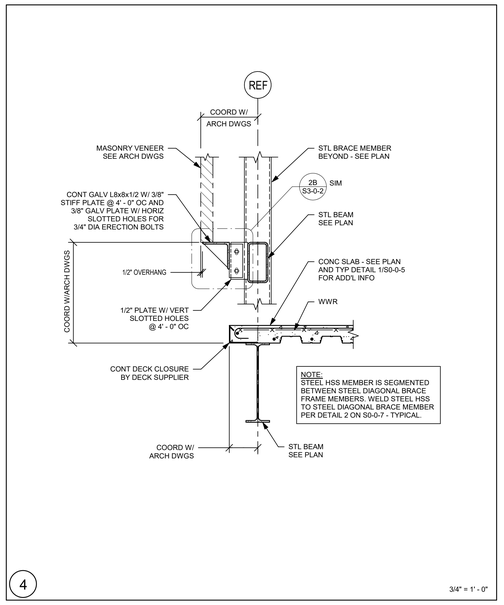

4

3/4" = 1' - 0"

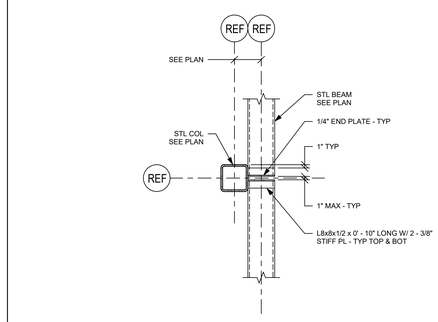

5

3/4" = 1' - 0"

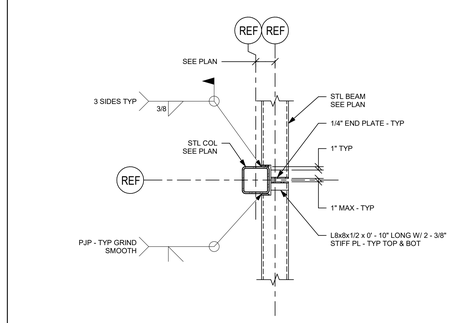

6

3/4" = 1' - 0"

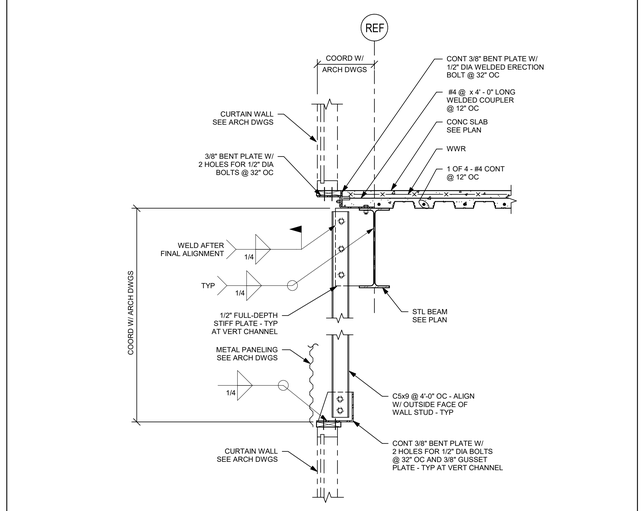

7

3/4" = 1' - 0"

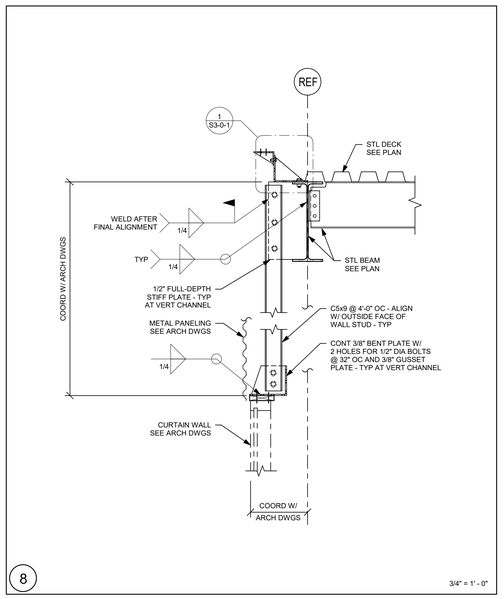

8

3/4" = 1' - 0"

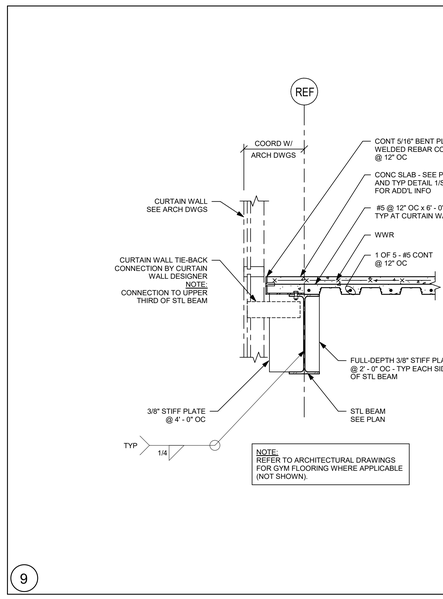

9

3/4" = 1' - 0"

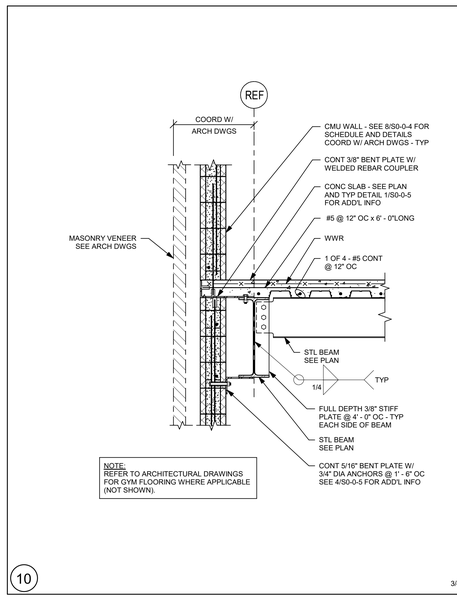

10

3/4" = 1' - 0"

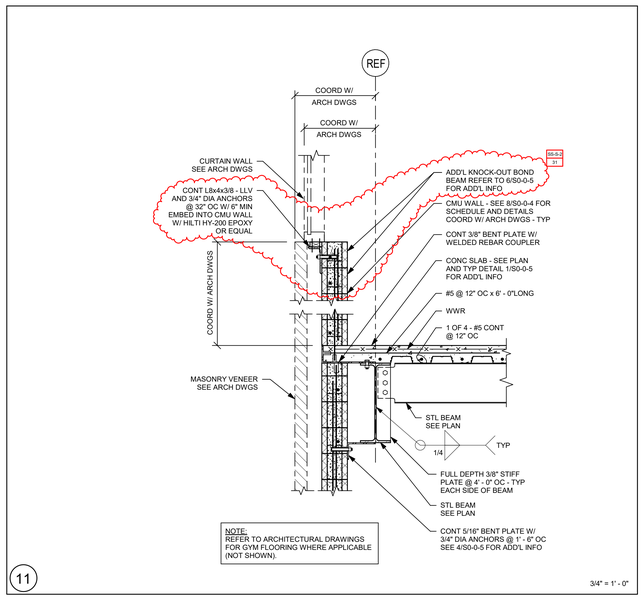

11

3/4" = 1' - 0"

DRA

Drummey Rosane Anderson, Inc.

225 Oakland Road
Studio 205
South Windsor, CT
06074

260 Charles Street
Studio 300
Waltham, MA
02453

Planning | Architecture | Interior Design

Tel: 617.964.1700
www.draiwa.com

NORTHEAST METRO TECH

100 Hemlock Rd,
Wakefield, MA 01880

EDG

Engineers Design Group Inc.
Structural Engineers
389 Main Street, Suite 401
Malden, MA 02148
(781)396-9007
EDG@EDGINC.COM

REVISION LIST

SS-S-2	4/21/2023	STRUCTURAL STEEL ADDENDUM 2

FOR REFERENCE ONLY
SCOPE OF WORK ON THIS DRAWING IS A PART OF EARLY STRUCTURAL BID PACKAGE

© COPYRIGHT 2021 DRUMMEY ROSANE ANDERSON, INC.

MSBA 90% CD SUBMISSION

MAY 12, 2023

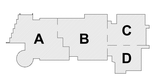

KEY PLAN

PROJECT NORTH

MAGNETIC NORTH

SECTIONS

Scale: As indicated
Job No.: 20202
Drawn By: EDG
Date: MAY 12, 2023

S3-0-7

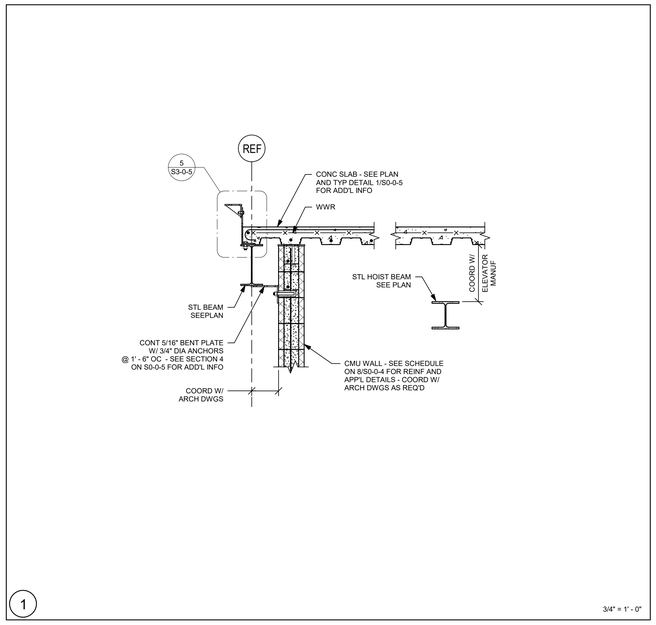

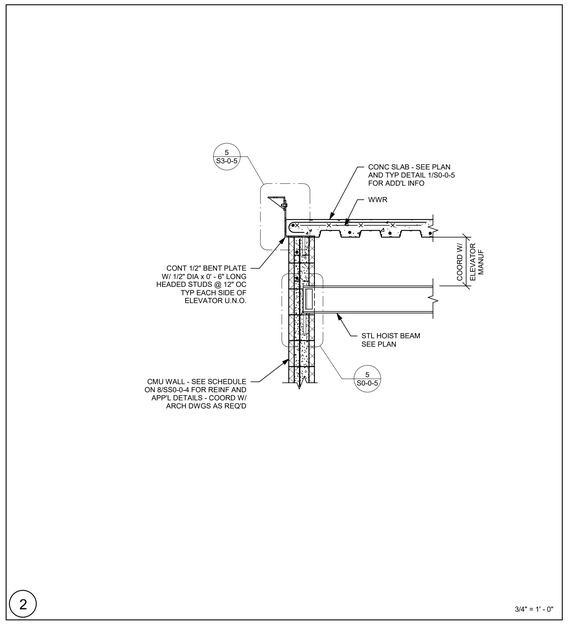

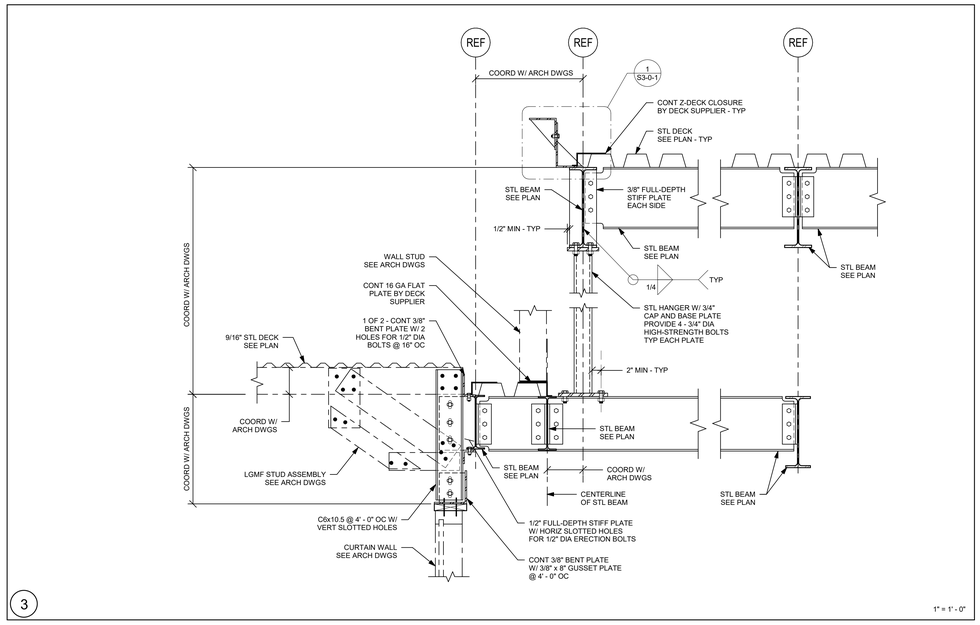

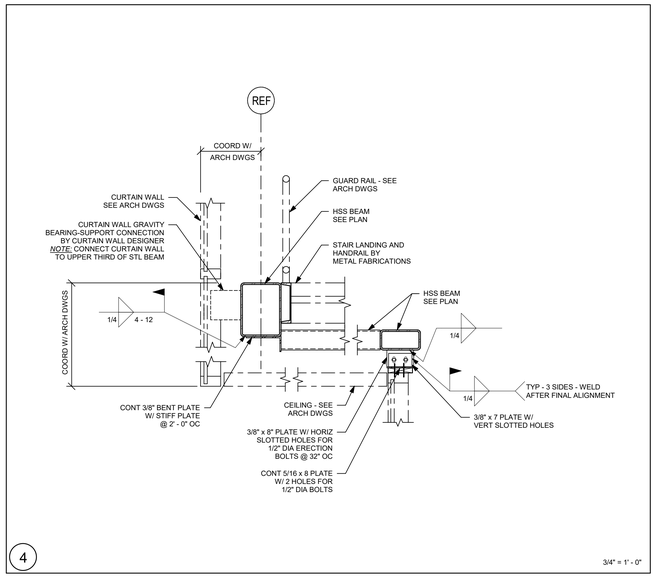

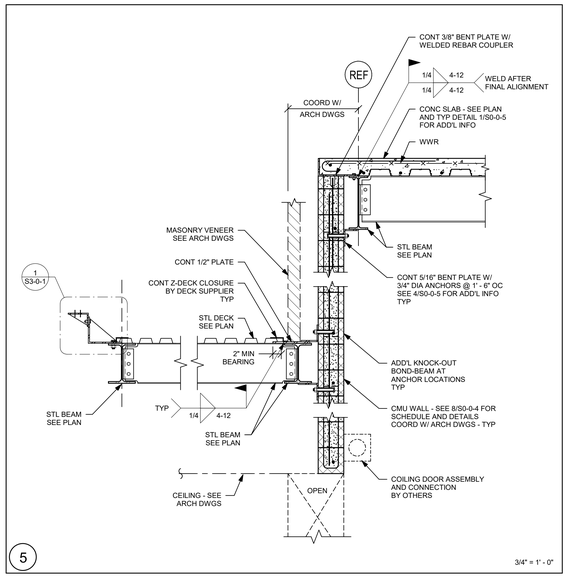

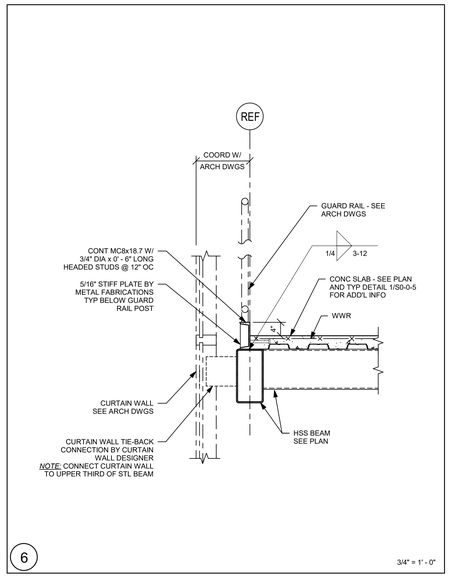

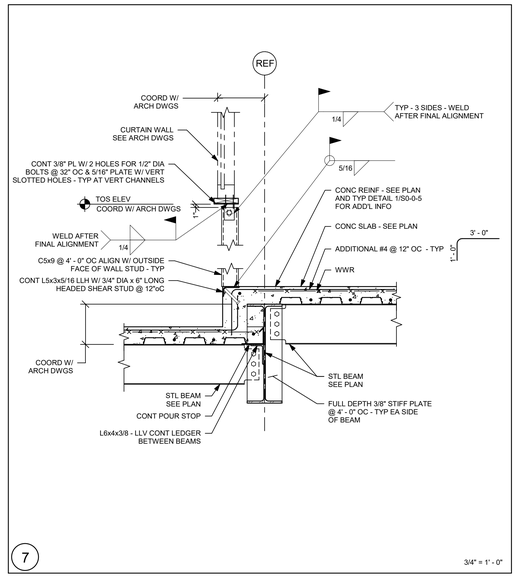

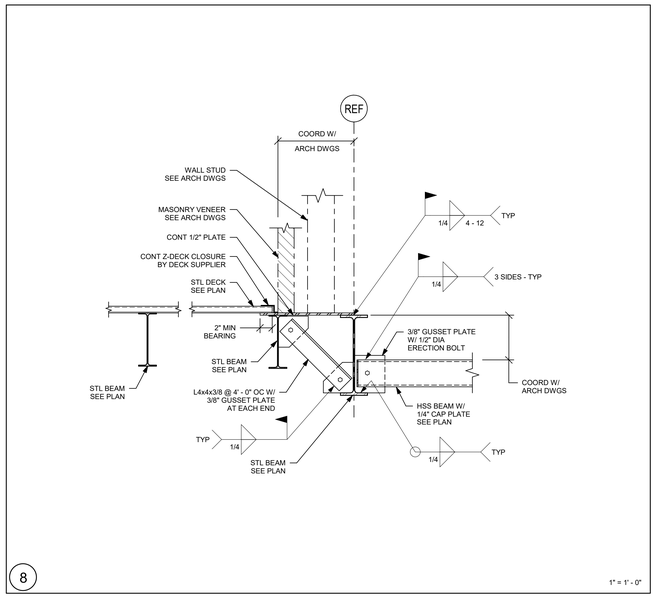

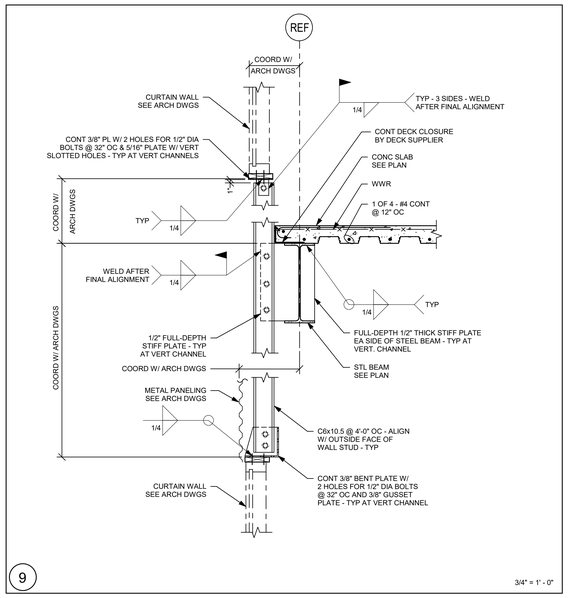

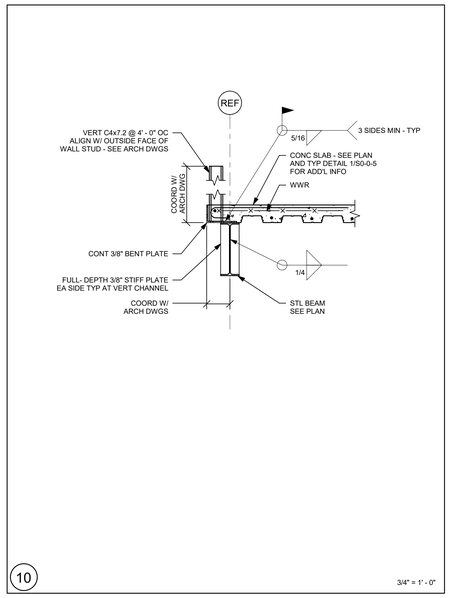

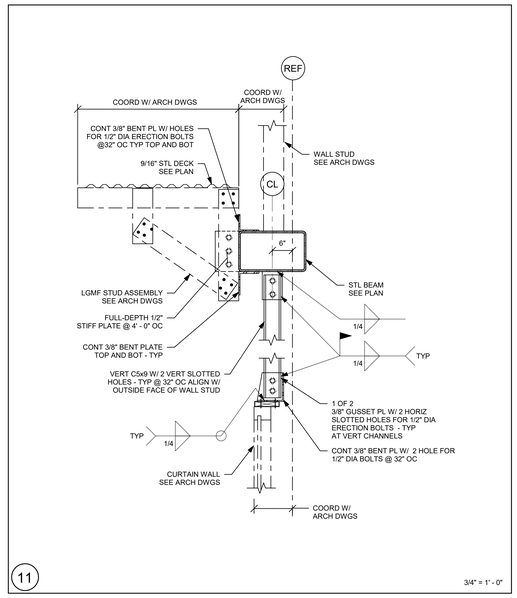

DRA

Drummey Rosane Anderson, Inc.

225 Oakland Road
Studio 205
South Windsor, CT
06074

260 Charles Street
Studio 300
Waltham, MA
02453

Planning | Architecture | Interior Design

Tel: 617-964-1700
www.draiwa.com

NORTHEAST METRO TECH

100 Hemlock Rd,
Wakefield, MA 01880

EDG
Engineers Design Group Inc.
Structural Engineers
389 Main Street, Suite 401
Malden, MA 02148
(781)396-9007
EDG@EDGINC.COM

REVISION LIST

FOR REFERENCE ONLY
SCOPE OF WORK ON THIS DRAWING IS A PART OF EARLY STRUCTURAL BID PACKAGE

© COPYRIGHT 2021 DRUMMEY ROSANE ANDERSON, INC.

MSBA 90% CD SUBMISSION

MAY 12, 2023

KEY PLAN

PROJECT NORTH

MAGNETIC NORTH

SECTIONS

Scale: As indicated
Job No.: 20202
Drawn By: EDG
Date: MAY 12, 2023

S3-0-8

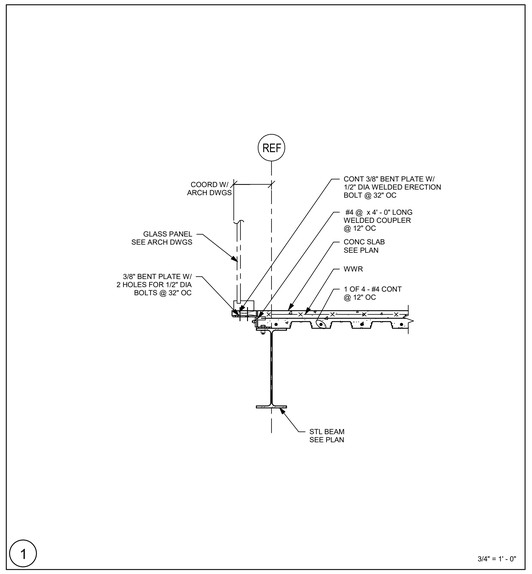

1

3/4" = 1' - 0"

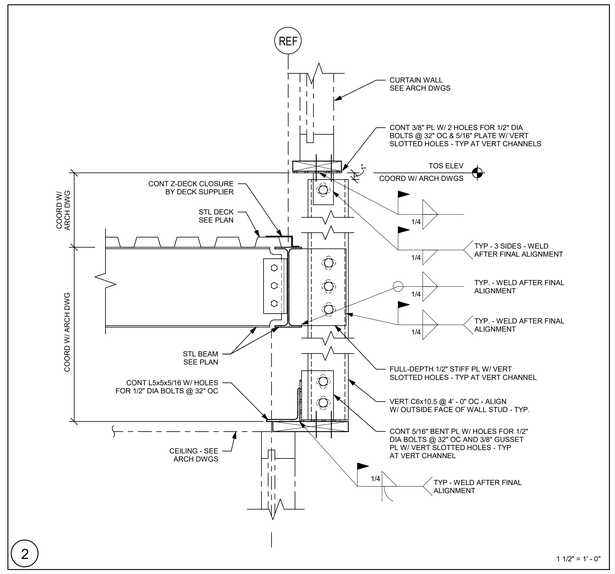

2

1 1/2" = 1' - 0"

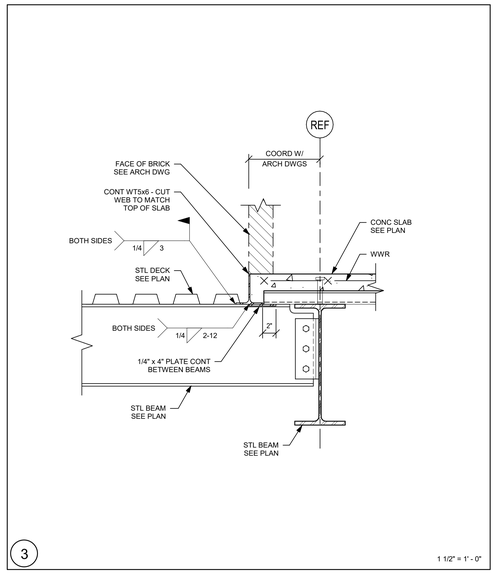

3

1 1/2" = 1' - 0"

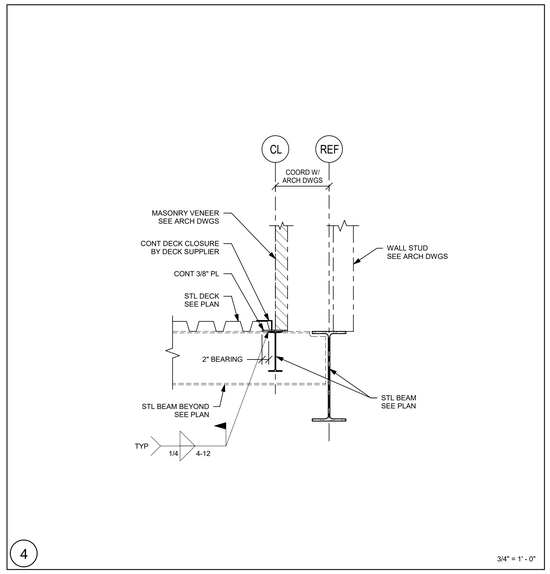

4

3/4" = 1' - 0"

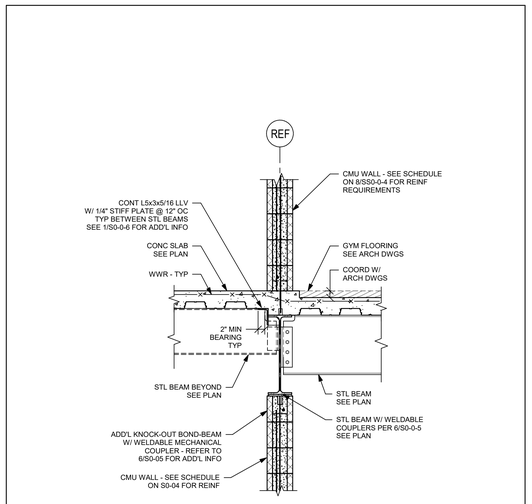

5

3/4" = 1' - 0"

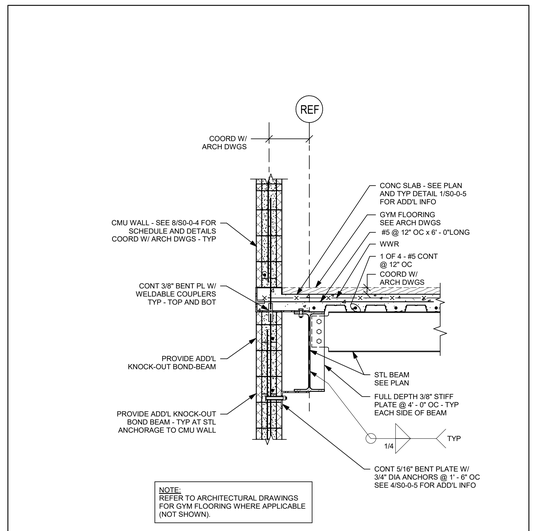

6

3/4" = 1' - 0"

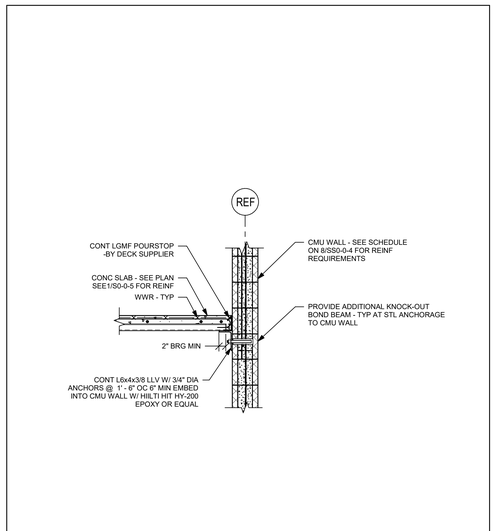

7

3/4" = 1' - 0"

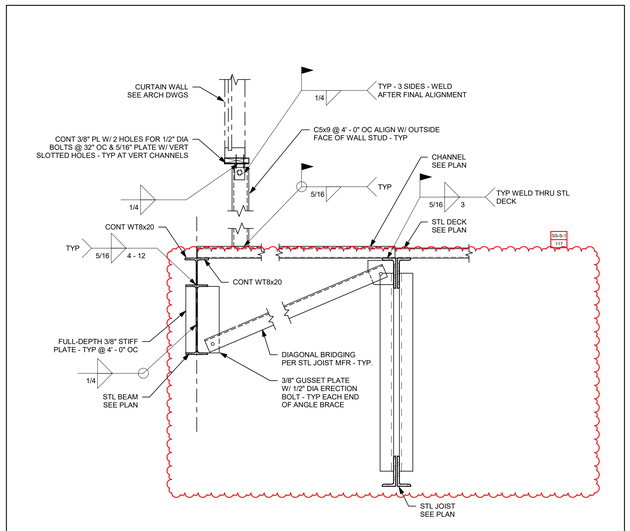

8

3/4" = 1' - 0"

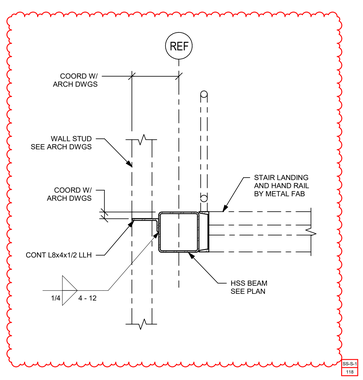

9

3/4" = 1' - 0"

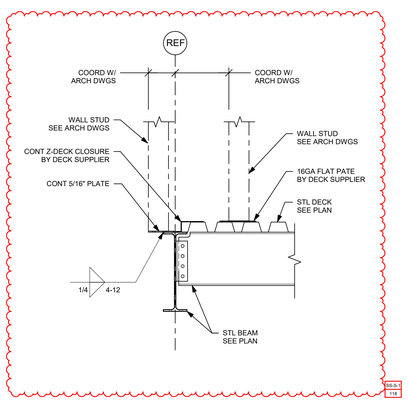

10

3/4" = 1' - 0"

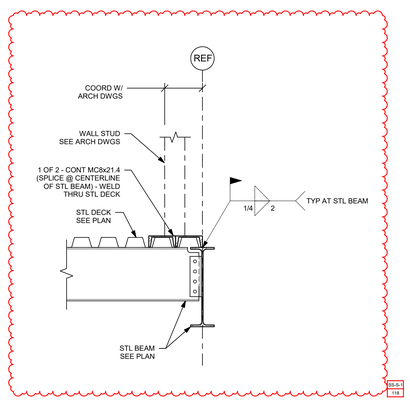

11

3/4" = 1' - 0"

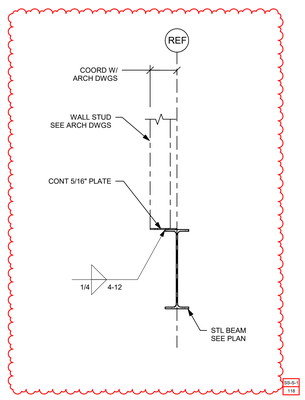

12

3/4" = 1' - 0"

DRA

Drummey Rosane Anderson, Inc.

225 Oakland Road
Studio 205
South Windsor, CT
06074

260 Charles Street
Studio 300
Waltham, MA
02453

Planning | Architecture | Interior Design

Tel: 617.964.1700
www.draws.com

NORTHEAST METRO TECH

100 Hemlock Rd,
Wakefield, MA 01880

EDG
Engineers Design Group Inc.
Structural Engineers
389 Main Street, Suite 401
Malden, MA 02148
(781)396-9007
EDG@EDGINC.COM

REVISION LIST

SS-S-1	4/14/2023	STRUCTURAL STEEL ADDENDUM 1

FOR REFERENCE ONLY
SCOPE OF WORK ON THIS DRAWING IS A PART OF EARLY STRUCTURAL BID PACKAGE

© COPYRIGHT 2021 DRUMMEY ROSANE ANDERSON, INC.

MSBA 90% CD SUBMISSION

MAY 12, 2023

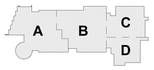

KEY PLAN

PROJECT NORTH

MAGNETIC NORTH

SECTIONS

Scale: As indicated
Job No.: 20202
Drawn By: EDG
Date: MAY 12, 2023

S3-0-9

BRACE FRAME NOTES:

1.) FABRICATOR IS RESPONSIBLE FOR BRACE CONNECTION DESIGN.

2.) ELEVATIONS ARE SCHEMATIC ONLY AND INTENDED TO SHOW CONFIGURATION OF BRACED FRAMES AND BRACE FORCES.

3.) DESIGN DIAGONAL MEMBER CONNECTIONS FOR TWICE THE AXIAL DESIGN FORCE SHOWN BELOW EACH MEMBER <30k> (TENSION OR COMPRESSION). AXIAL DESIGN FORCE IS BASED ON LRFD. USE GENERAL UNIFORM FORCE METHOD FOR CONNECTION DESIGN.

4.) DO NOT WELD TOP END OF DIAGONAL BRACE MEMBERS IN PLACE UNTIL FLOOR SLABS AND ROOFING ARE IN PLACE. WELDS MUST BE FULLY INSPECTED AND APPROVED PRIOR TO PLACING ANY CONCRETE OR INSTALLING OTHER MATERIALS THAT WOULD COVER THE CONNECTIONS.

5.) BOLTED CONNECTIONS IN BRACED FRAMES SHALL BE DESIGNED AS SLIP CRITICAL CONNECTIONS.

6.) SEE PLANS FOR COLUMN AND BEAM SIZES.

7.) CENTERLINE OF BRACE MEMBER SHALL BE OFFSET FROM WORKPOINT LINE AS NOTED AS SHOWN ON ELEVATION.

8.) * SYMBOL AT THE END OF A STEEL BEAM SIZE (HSS*, WF*, ETC.) DENOTES EXPOSED BRACE FRAME MEMBERS. (INCLUDING STEEL BEAMS AND COLUMNS) TO RECEIVE INTUMESCENT MASTIC FIREPROOFING.

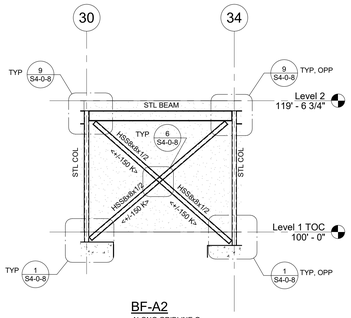

BF-A2
ALONG GRIDLINE G

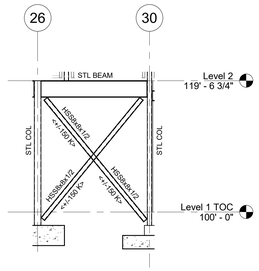

BF-A3
ALONG GRIDLINE K

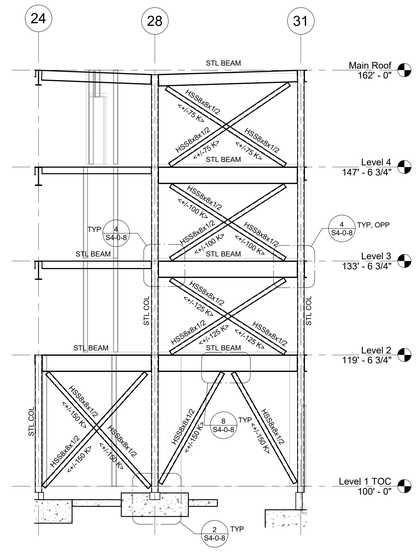

BF-A4
ALONG GRIDLINE M

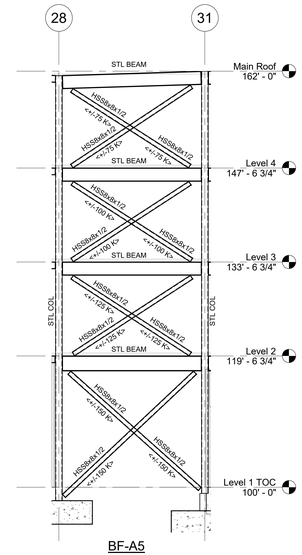

BF-A5
ALONG GRIDLINE N

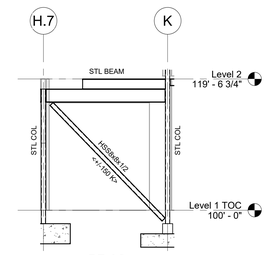

BF-A6
ALONG GRIDLINE 30

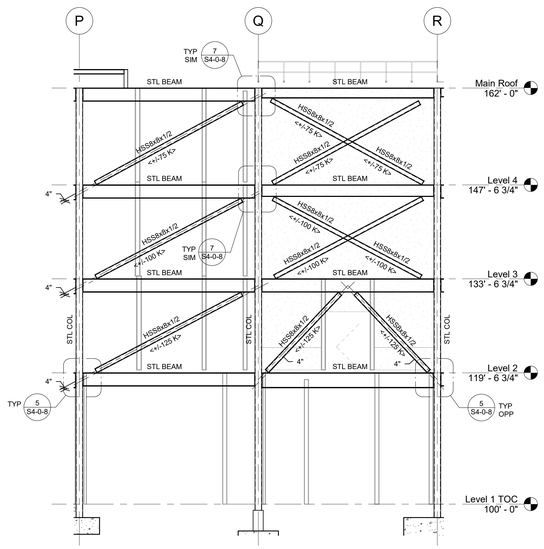

(SEE NOTE #7)

BF-A7
ALONG GRIDLINE 24

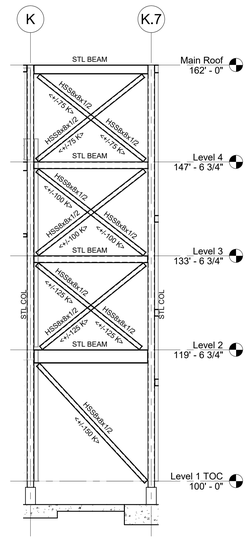

BF-A9
ALONG GRIDLINE 31

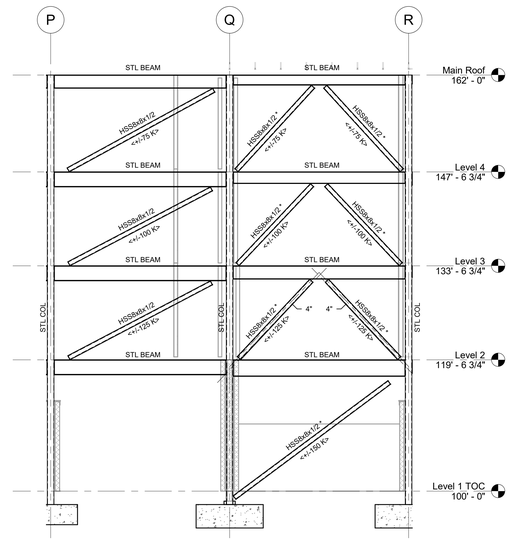

(SEE NOTE #7)

BF-A11
ALONG GRIDLINE 13

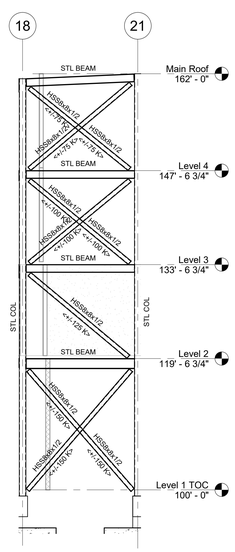

BF-A13
ALONG GRIDLINE M

FIREPROOFING NOTES:

1. STEEL COLUMNS SHOWN ON THIS DRAWING SHALL RECEIVE 2-HOUR FIRE RATING BY CEMENTITIOUS FIREPROOFING UNLESS INDICATED AS A ROUND HSS COLUMN. EXPOSED TO VIEW PORTION OF ROUND HSS COLUMNS SHALL RECEIVE 2-HOUR FIRE RATING BY INTUMESCENT MASTIC FIREPROOFING. CONCEALED FROM VIEW PORTION OF ROUND HSS COLUMN SHALL RECEIVE 2-HOUR FIRE RATING BY CEMENTITIOUS FIREPROOFING.

2. CONCEALED FROM VIEW BRACED FRAME MEMBERS SHALL RECEIVE 2-HOUR FIRE RATING BY CEMENTITIOUS FIREPROOFING .

3. EXPOSED TO VIEW BRACED FRAME MEMBERS SHALL RECEIVE 2-HOUR FIRE RATING BY INTUMENCENT MASTIC FIREPROOFING.

4. COORDINATE FIREPROOFING REQUIREMENTS WITH THE SPECIFICATIONS AND ARCHITECTURAL DRAWINGS.

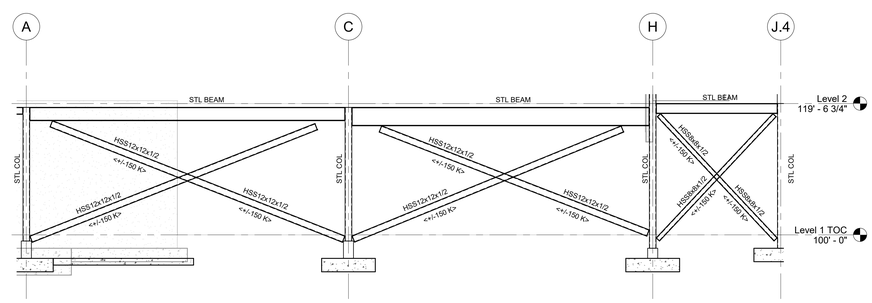

BF-A14
ALONG GRIDLINE 19

DRA

Drummey Rosane Anderson, Inc.

225 Oakland Road
Studio 205
South Windsor, CT
06074

260 Charles Street
Studio 300
Waltham, MA
02453

Planning | Architecture | Interior Design

Tel: 617.964.1700
www.draiwa.com

NORTHEAST METRO TECH

100 Hemlock Rd,
Wakefield, MA 01880

EDG
Engineers Design Group Inc.
Structural Engineers
389 Main Street, Suite 401
Malden, MA 02148
(781)396-9007
EDG@EDGINC.COM

REVISION LIST

© COPYRIGHT 2021 DRUMMEY ROSANE ANDERSON, INC.

FOR REFERENCE ONLY
SCOPE OF WORK ON THIS DRAWING IS A PART OF EARLY STRUCTURAL BID PACKAGE

MSBA 90% CD SUBMISSION

MAY 12, 2023

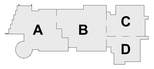

KEY PLAN

PROJECT NORTH

MAGNETIC NORTH

BRACE FRAME ELEVATIONS - AREA A

Scale: 1/8" = 1'-0"
Job No.: 20202
Drawn By: EDG
Date: MAY 12, 2023

S4-0-1

FIREPROOFING NOTES:

1. STEEL COLUMNS SHOWN ON THIS DRAWING SHALL RECEIVE 2-HOUR FIRE RATING BY CEMENTITIOUS FIREPROOFING UNLESS INDICATED AS A ROUND HSS COLUMN. EXPOSED TO VIEW PORTION OF ROUND HSS COLUMNS SHALL RECEIVE 2-HOUR FIRE RATING BY INTUMESCENT MASTIC FIREPROOFING. CONCEALED FROM VIEW PORTION OF ROUND HSS COLUMN SHALL RECEIVE 2-HOUR FIRE RATING BY CEMENTITIOUS FIREPROOFING.
2. CONCEALED FROM VIEW BRACED FRAME MEMBERS SHALL RECEIVE 2-HOUR FIRE RATING BY CEMENTITIOUS FIREPROOFING .
3. EXPOSED TO VIEW BRACED FRAME MEMBERS SHALL RECEIVE 2-HOUR FIRE RATING BY INTUMENCENT MASTIC FIREPROOFING.
4. COORDINATE FIREPROOFING REQUIREMENTS WITH THE SPECIFICATIONS AND ARCHITECTURAL DRAWINGS.

BRACE FRAME NOTES:

1.) FABRICATOR IS RESPONSIBLE FOR BRACE CONNECTION DESIGN.

2.) ELEVATIONS ARE SCHEMATIC ONLY AND INTENDED TO SHOW CONFIGURATION OF BRACED FRAMES AND BRACE FORCES.

3.) DESIGN DIAGONAL MEMBER CONNECTIONS FOR TWICE THE AXIAL DESIGN FORCE SHOWN BELOW EACH MEMBER <30k> (TENSION OR COMPRESSION). AXIAL DESIGN FORCE IS BASED ON LRFD. USE GENERAL UNIFORM FORCE METHOD FOR CONNECTION DESIGN.

4.) DO NOT WELD TOP END OF DIAGONAL BRACE MEMBERS IN PLACE UNTIL FLOOR SLABS AND ROOFING ARE IN PLACE. WELDS MUST BE FULLY INSPECTED AND APPROVED PRIOR TO PLACING ANY CONCRETE OR INSTALLING OTHER MATERIALS THAT WOULD COVER THE CONNECTIONS.

5.) BOLTED CONNECTIONS IN BRACED FRAMES SHALL BE DESIGNED AS SLIP CRITICAL CONNECTIONS.

6.) SEE PLANS FOR COLUMN AND BEAM SIZES.

7.) CENTERLINE OF BRACE MEMBER SHALL BE OFFSET FROM WORKPOINT LINE AS NOTED AS SHOWN ON ELEVATION.

8.) * SYMBOL AT THE END OF A STEEL BEAM SIZE (HSS*, WF*, ETC.) DENOTES EXPOSED BRACE FRAME MEMBERS, (INCLUDING STEEL BEAMS AND COLUMNS) TO RECEIVE INTUMESCENT MASTIC FIREPROOFING.

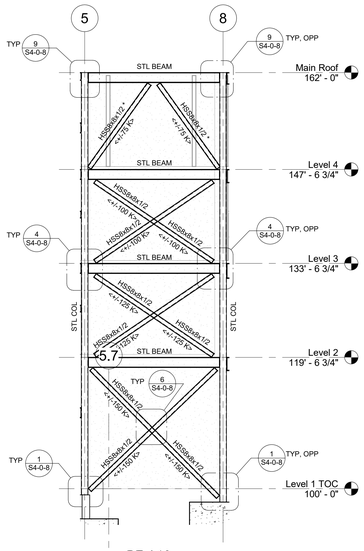

BF-A16
ALONG GRIDLINE K.9

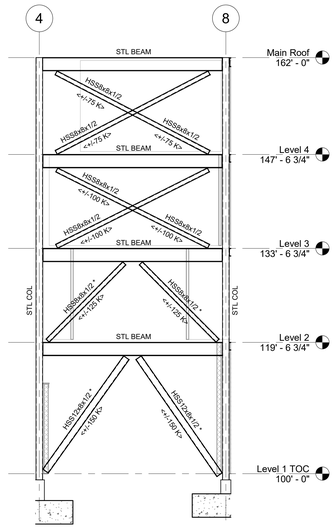

BF-A17
ALONG GRIDLINE M

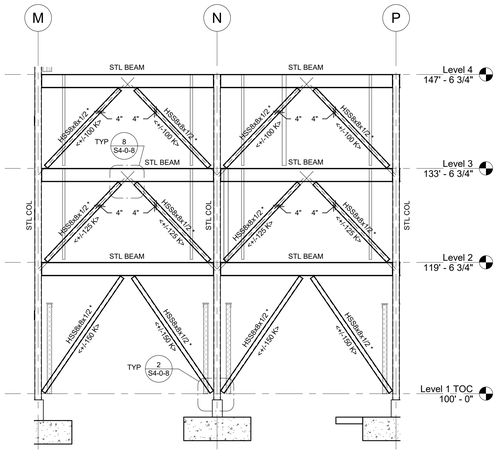

(SEE NOTE #7)
BF-A18
ALONG GRIDLINE 4

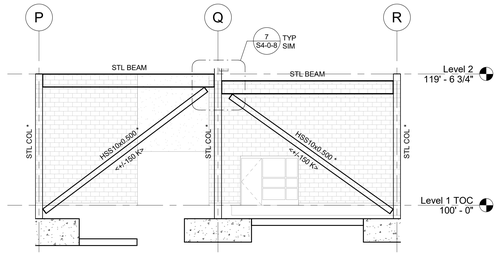

BF-A19
ALONG GRIDLINE 21

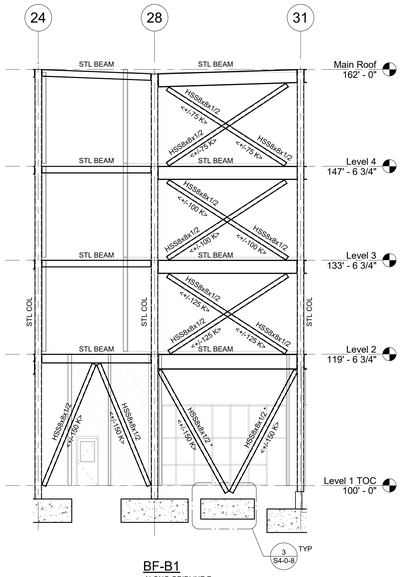

BF-B1
ALONG GRIDLINE R

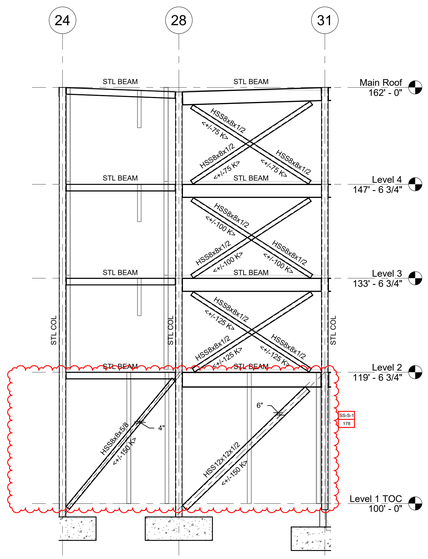

(SEE NOTE #7)
BF-B2
ALONG GRIDLINE W

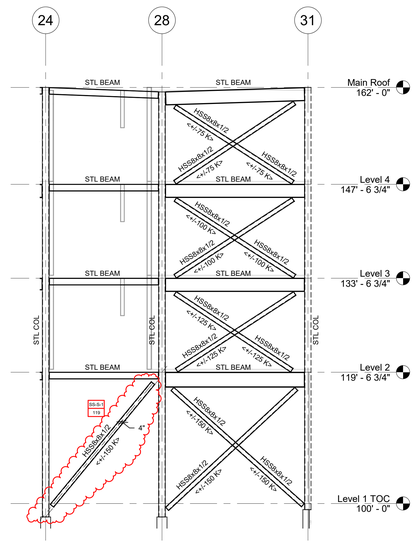

(SEE NOTE #7)
BF-B3
ALONG GRIDLINE Y

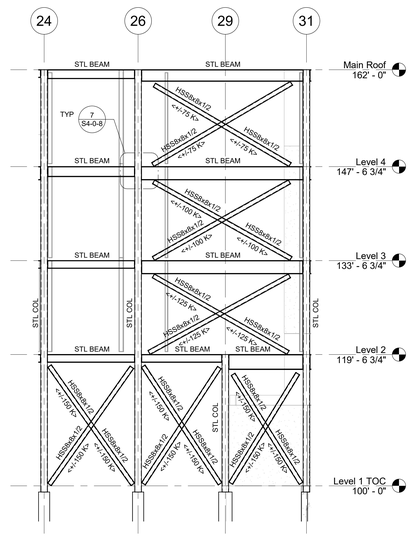

BF-B4
ALONG GRIDLINE Z

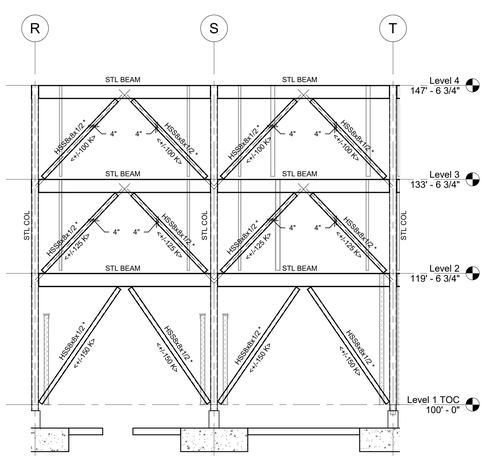

(SEE NOTE #7)
BF-B5
ALONG GRIDLINE 4

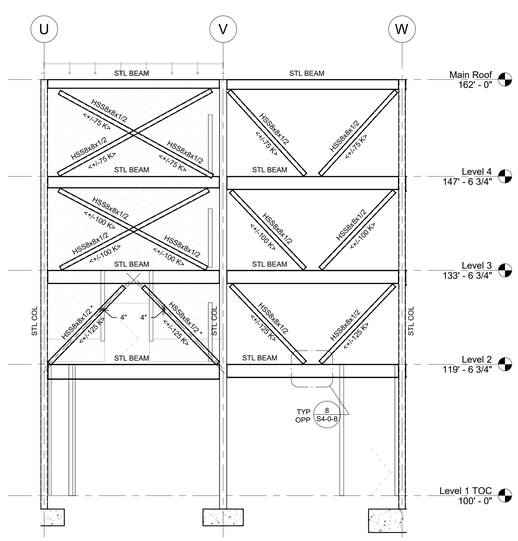

(SEE NOTE #7)
BF-B6
ALONG GRIDLINE 24

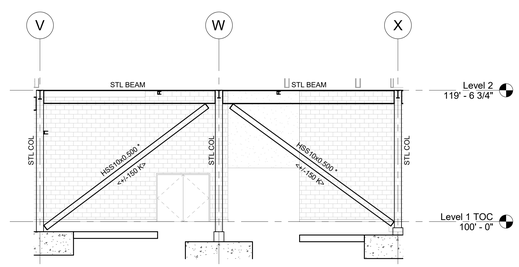

BF-B7
ALONG GRIDLINE 21

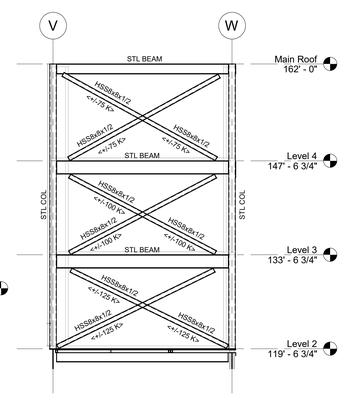

BF-B8
ALONG GRIDLINE 24

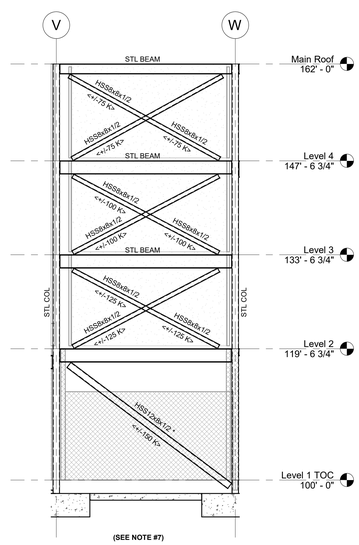

(SEE NOTE #7)
BF-B9
ALONG GRIDLINE 15

© COPYRIGHT 2021 DRUMMEY ROSANE ANDERSON, INC.

DRA
Drummey Rosane Anderson, Inc.
225 Oakland Road
Studio 205
South Windsor, CT
06074
260 Charles Street
Studio 300
Waltham, MA
02453
Planning | Architecture | Interior Design
Tel: 617.964.1700
www.draiwa.com

NORTHEAST METRO TECH

100 Hemlock Rd,
Wakefield, MA 01880

EDG
Engineers Design Group Inc.
Structural Engineers
389 Main Street, Suite 401
Malden, MA 02148
(781)396-9007
EDG@EDGINC.COM

REVISION LIST

SS-S-1	4/14/2023	STRUCTURAL STEEL ADDENDUM 1

FOR REFERENCE ONLY
SCOPE OF WORK ON THIS DRAWING IS A PART OF EARLY STRUCTURAL BID PACKAGE

MSBA 90% CD SUBMISSION

MAY 12, 2023

KEY PLAN

PROJECT NORTH | MAGNETIC NORTH

BRACE FRAME ELEVATION - AREAS A + B

Scale: 1/8" = 1'-0"
Job No.: 20202
Drawn By: EDG
Date: MAY 12, 2023

S4-0-2

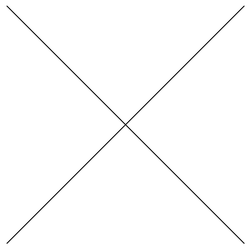

NOT USED

BF-10B

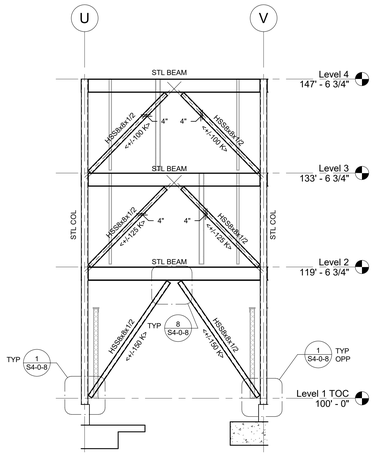

(SEE NOTE #7)

BF-B12

ALONG GRIDLINE 4

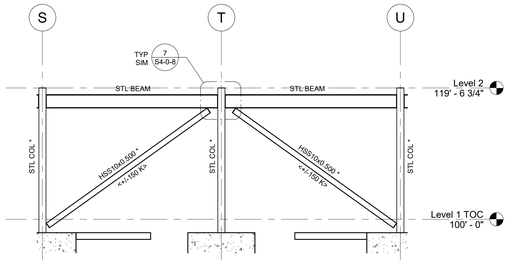

BF-B13

ALONG GRIDLINE 21

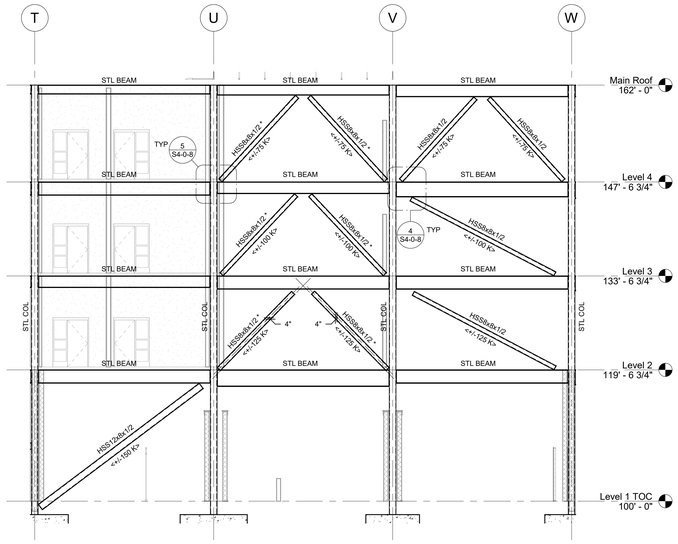

(SEE NOTE #7)

BF-B15

ALONG GRIDLINE 13

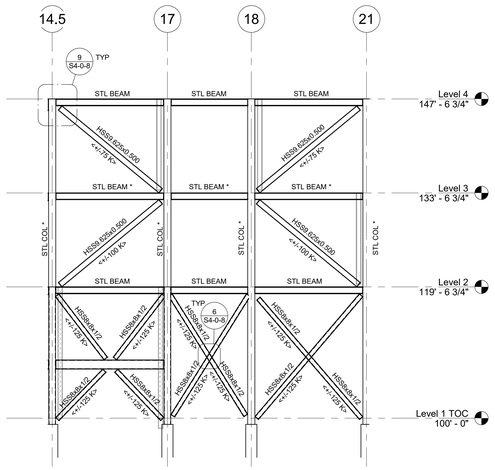

BF-B17

ALONG GRIDLINE Z

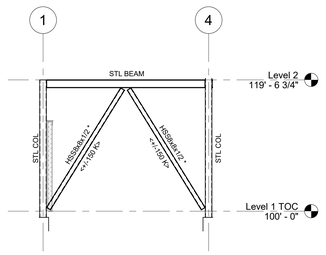

BF-B18

ALONG GRIDLINE Y.9

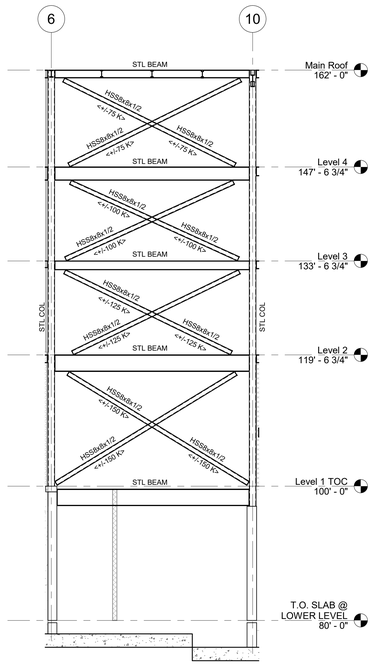

BF-B19

ALONG GRIDLINE Y.9

FIREPROOFING NOTES:

1. STEEL COLUMNS SHOWN ON THIS DRAWING SHALL RECEIVE 2-HOUR FIRE RATING BY CEMENTITIOUS FIREPROOFING UNLESS INDICATED AS A ROUND HSS COLUMN EXPOSED TO VIEW PORTION OF ROUND HSS COLUMNS SHALL RECEIVE 2-HOUR FIRE RATING BY INTUMESCENT MASTIC FIREPROOFING. CONCEALED FROM VIEW PORTION OF ROUND HSS COLUMN SHALL RECEIVE 2-HOUR FIRE RATING BY CEMENTITIOUS FIREPROOFING.
2. CONCEALED FROM VIEW BRACED FRAME MEMBERS SHALL RECEIVE 2-HOUR FIRE RATING BY CEMENTITIOUS FIREPROOFING.
3. EXPOSED TO VIEW BRACED FRAME MEMBERS SHALL RECEIVE 2-HOUR FIRE RATING BY INTUMENCENT MASTIC FIREPROOFING.
4. COORDINATE FIREPROOFING REQUIREMENTS WITH THE SPECIFICATIONS AND ARCHITECTURAL DRAWINGS.

BRACE FRAME NOTES:

1.) FABRICATOR IS RESPONSIBLE FOR BRACE CONNECTION DESIGN.

2.) ELEVATIONS ARE SCHEMATIC ONLY AND INTENDED TO SHOW CONFIGURATION OF BRACED FRAMES AND BRACE FORCES.

3.) DESIGN DIAGONAL MEMBER CONNECTIONS FOR TWICE THE AXIAL DESIGN FORCE SHOWN BELOW EACH MEMBER <30k> (TENSION OR COMPRESSION). AXIAL DESIGN FORCE IS BASED ON LRFD. USE GENERAL UNIFORM FORCE METHOD FOR CONNECTION DESIGN.

4.) DO NOT WELD TOP END OF DIAGONAL BRACE MEMBERS IN PLACE UNTIL FLOOR SLABS AND ROOFING ARE IN PLACE. WELDS MUST BE FULLY INSPECTED AND APPROVED PRIOR TO PLACING ANY CONCRETE OR INSTALLING OTHER MATERIALS THAT WOULD COVER THE CONNECTIONS.

5.) BOLTED CONNECTIONS IN BRACED FRAMES SHALL BE DESIGNED AS SLIP CRITICAL CONNECTIONS.

6.) SEE PLANS FOR COLUMN AND BEAM SIZES.

7.) CENTERLINE OF BRACE MEMBER SHALL BE OFFSET FROM WORKPOINT LINE AS NOTED AS SHOWN ON ELEVATION.

8.) * SYMBOL AT THE END OF A STEEL BEAM SIZE (HSS*, WF*, ETC.) DENOTES EXPOSED BRACE FRAME MEMBERS, (INCLUDING STEEL BEAMS AND COLUMNS) TO RECEIVE INTUMESCENT MASTIC FIREPROOFING.

DRA

Drummey Rosane Anderson, Inc.

225 Oakland Road
Studio 205
South Windsor, CT
06074

260 Charles Street
Studio 300
Waltham, MA
02453

Planning | Architecture | Interior Design

Tel: 617.964.1700
www.draiwa.com

NORTHEAST METRO TECH

100 Hemlock Rd,
Wakefield, MA 01880

EDG

Engineers Design Group Inc.
Structural Engineers
389 Main Street, Suite 401
Malden, MA 02148
(781)396-9007
EDG@EDGINC.COM

REVISION LIST

FOR REFERENCE ONLY
SCOPE OF WORK ON THIS DRAWING IS A PART OF EARLY STRUCTURAL BID PACKAGE

© COPYRIGHT 2021 DRUMMEY ROSANE ANDERSON, INC.

MSBA 90% CD SUBMISSION

MAY 12, 2023

KEY PLAN

PROJECT NORTH

MAGNETIC NORTH

BRACE FRAME ELEVATION - AREA B

Scale: 1/8" = 1'-0"
Job No.: 20202
Drawn By: EDG
Date: MAY 12, 2023

S4-0-3

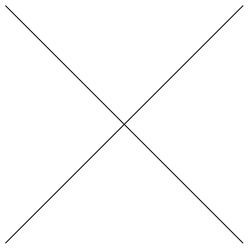

NOT USED

BF-C1

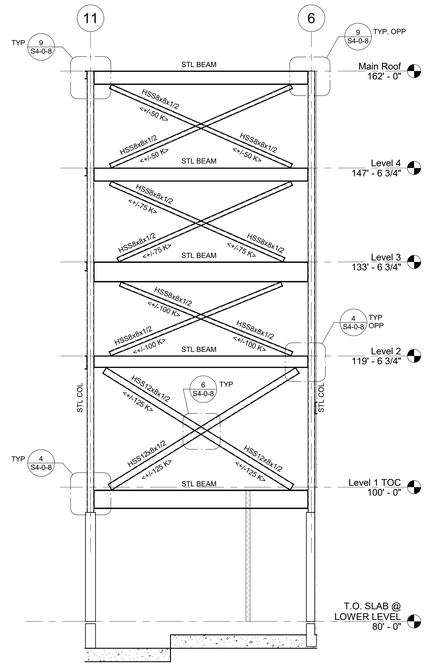

BF-C2
ALONG GRIDLINE AA

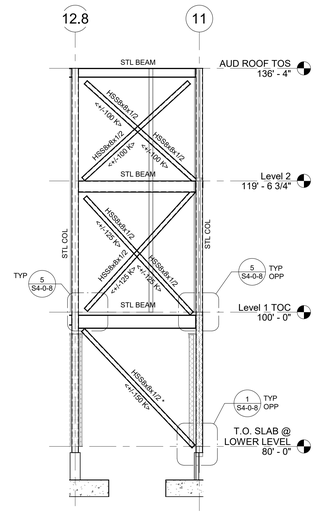

BF-C3
ALONG GRIDLINE PP

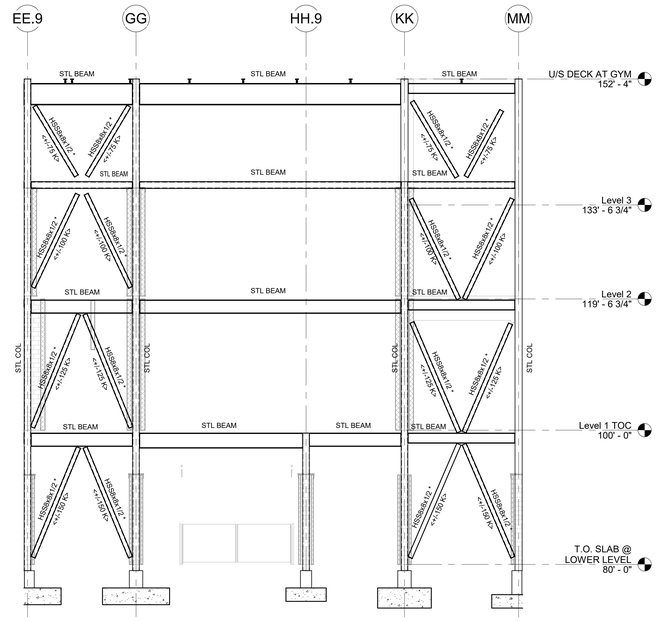

BF-D1 AND SW-D3
ALONG GRIDLINE 36

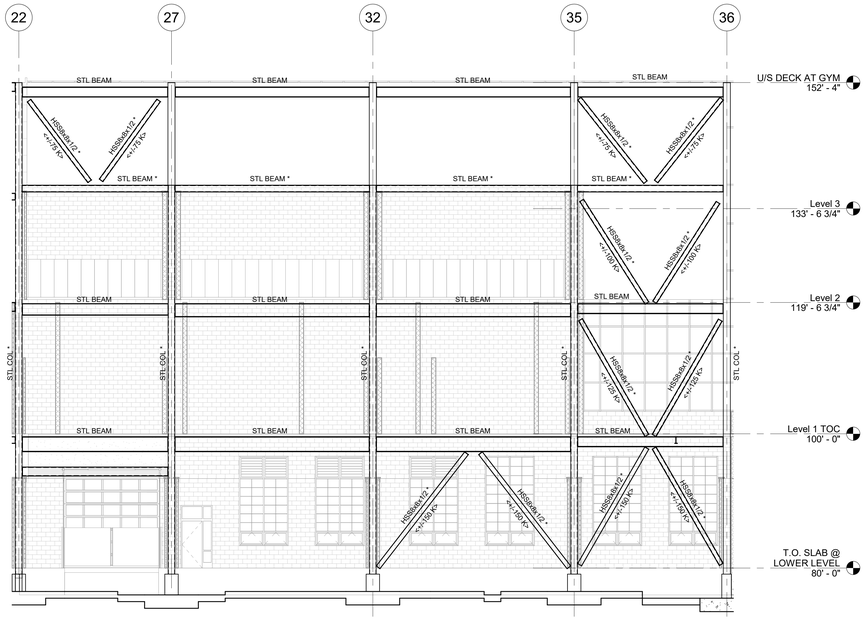

BF-D2 AND SW-D2
ALONG GRIDLINE MM

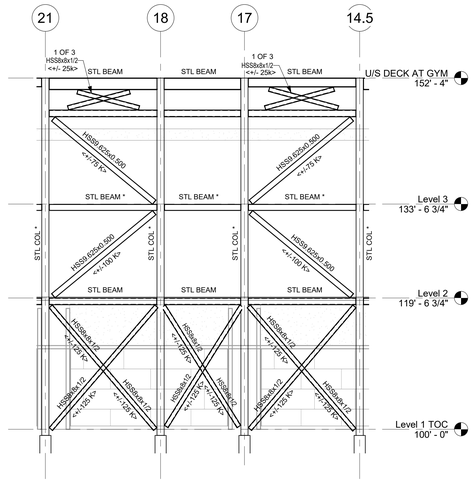

BF-D4
ALONG GRIDLINE AA

FIREPROOFING NOTES:

1. STEEL COLUMNS SHOWN ON THIS DRAWING SHALL RECEIVE 2-HOUR FIRE RATING BY CEMENTITIOUS FIREPROOFING UNLESS INDICATED AS A ROUND HSS COLUMN. EXPOSED TO VIEW PORTION OF ROUND HSS COLUMNS SHALL RECEIVE 2-HOUR FIRE RATING BY INTUMESCENT MASTIC FIREPROOFING. CONCEALED FROM VIEW PORTION OF ROUND HSS COLUMN SHALL RECEIVE 2-HOUR FIRE RATING BY CEMENTITIOUS FIREPROOFING.
2. CONCEALED FROM VIEW BRACED FRAME MEMBERS SHALL RECEIVE 2-HOUR FIRE RATING BY CEMENTITIOUS FIREPROOFING .
3. EXPOSED TO VIEW BRACED FRAME MEMBERS SHALL RECEIVE 2-HOUR FIRE RATING BY INTUMENCENT MASTIC FIREPROOFING.
4. COORDINATE FIREPROOFING REQUIREMENTS WITH THE SPECIFICATIONS AND ARCHITECTURAL DRAWINGS.

BRACE FRAME NOTES:

1.) FABRICATOR IS RESPONSIBLE FOR BRACE CONNECTION DESIGN.

2.) ELEVATIONS ARE SCHEMATIC ONLY AND INTENDED TO SHOW CONFIGURATION OF BRACED FRAMES AND BRACE FORCES.

3.) DESIGN DIAGONAL MEMBER CONNECTIONS FOR TWICE THE AXIAL DESIGN FORCE SHOWN BELOW EACH MEMBER <30k> (TENSION OR COMPRESSION). AXIAL DESIGN FORCE IS BASED ON LRFD. USE GENERAL UNIFORM FORCE METHOD FOR CONNECTION DESIGN.

4.) DO NOT WELD TOP END OF DIAGONAL BRACE MEMBERS IN PLACE UNTIL FLOOR SLABS AND ROOFING ARE IN PLACE. WELDS MUST BE FULLY INSPECTED AND APPROVED PRIOR TO PLACING ANY CONCRETE OR INSTALLING OTHER MATERIALS THAT WOULD COVER THE CONNECTIONS.

5.) BOLTED CONNECTIONS IN BRACED FRAMES SHALL BE DESIGNED AS SLIP CRITICAL CONNECTIONS.

6.) SEE PLANS FOR COLUMN AND BEAM SIZES.

7.) CENTERLINE OF BRACE MEMBER SHALL BE OFFSET FROM WORKPOINT LINE AS NOTED AS SHOWN ON ELEVATION.

8.) * SYMBOL AT THE END OF A STEEL BEAM SIZE (HSS*, WF*, ETC.) DENOTES EXPOSED BRACE FRAME MEMBERS. (INCLUDING STEEL BEAMS AND COLUMNS) TO RECEIVE INTUMESCENT MASTIC FIREPROOFING.

DRA

Drummey Rosane Anderson, Inc.

225 Oakland Road
Studio 205
South Windsor, CT
06074

260 Charles Street
Studio 300
Waltham, MA
02453

Planning | Architecture | Interior Design

Tel: 617.964.1700
www.draiwa.com

NORTHEAST METRO TECH

100 Hemlock Rd,
Wakefield, MA 01880

EDG
Engineers Design Group Inc.
Structural Engineers
389 Main Street, Suite 401
Malden, MA 02148
(781)396-9007
EDG@EDGINC.COM

REVISION LIST

FOR REFERENCE ONLY
SCOPE OF WORK ON THIS DRAWING IS A PART OF EARLY STRUCTURAL BID PACKAGE

© COPYRIGHT 2021 DRUMMEY ROSANE ANDERSON, INC.

MSBA 90% CD SUBMISSION

MAY 12, 2023

KEY PLAN

PROJECT NORTH

MAGNETIC NORTH

BRACED FRAME ELEVATION C + D

Scale: 1/8" = 1'-0"
Job No.: 20202
Drawn By: EDG
Date: MAY 12, 2023

S4-0-4

FIREPROOFING NOTES:

1. STEEL COLUMNS SHOWN ON THIS DRAWING SHALL RECEIVE 2-HOUR FIRE RATING BY CEMENTITIOUS FIREPROOFING UNLESS INDICATED AS A ROUND HSS COLUMN. EXPOSED TO VIEW PORTION OF ROUND HSS COLUMNS SHALL RECEIVE 2-HOUR FIRE RATING BY INTUMESCENT MASTIC FIREPROOFING. CONCEALED FROM VIEW PORTION OF ROUND HSS COLUMN SHALL RECEIVE 2-HOUR FIRE RATING BY CEMENTITIOUS FIREPROOFING.
2. CONCEALED FROM VIEW BRACED FRAME MEMBERS SHALL RECEIVE 2-HOUR FIRE RATING BY CEMENTITIOUS FIREPROOFING .
3. EXPOSED TO VIEW BRACED FRAME MEMBERS SHALL RECEIVE 2-HOUR FIRE RATING BY INTUMENCENT MASTIC FIREPROOFING.
4. COORDINATE FIREPROOFING REQUIREMENTS WITH THE SPECIFICATIONS AND ARCHITECTURAL DRAWINGS.

BRACE FRAME NOTES:

1.) FABRICATOR IS RESPONSIBLE FOR BRACE CONNECTION DESIGN.

2.) ELEVATIONS ARE SCHEMATIC ONLY AND INTENDED TO SHOW CONFIGURATION OF BRACED FRAMES AND BRACE FORCES.

3.) DESIGN DIAGONAL MEMBER CONNECTIONS FOR TWICE THE AXIAL DESIGN FORCE SHOWN BELOW EACH MEMBER <30k> (TENSION OR COMPRESSION). AXIAL DESIGN FORCE IS BASED ON LRFD. USE GENERAL UNIFORM FORCE METHOD FOR CONNECTION DESIGN.

4.) DO NOT WELD TOP END OF DIAGONAL BRACE MEMBERS IN PLACE UNTIL FLOOR SLABS AND ROOFING ARE IN PLACE. WELDS MUST BE FULLY INSPECTED AND APPROVED PRIOR TO PLACING ANY CONCRETE OR INSTALLING OTHER MATERIALS THAT WOULD COVER THE CONNECTIONS.

5.) BOLTED CONNECTIONS IN BRACED FRAMES SHALL BE DESIGNED AS SLIP CRITICAL CONNECTIONS.

6.) SEE PLANS FOR COLUMN AND BEAM SIZES.

7.) CENTERLINE OF BRACE MEMBER SHALL BE OFFSET FROM WORKPOINT LINE AS NOTED AS SHOWN ON ELEVATION.

8.) * SYMBOL AT THE END OF A STEEL BEAM SIZE (HSS*, WF*, ETC.) DENOTES EXPOSED BRACE FRAME MEMBERS, (INCLUDING STEEL BEAMS AND COLUMNS) TO RECEIVE INTUMESCENT MASTIC FIREPROOFING.

SHEAR WALL NOTES:

1. ELEVATIONS ARE SCHEMATIC ONLY, AND INTENDED TO SHOW CONFIGURATION OF SHEAR WALLS.
2. SEE PLANS FOR COLUMN AND BEAM SIZES.
3. COORDINATE LOCATIONS OF OPENINGS WITHIN WALLS WITH ARCHITECTURAL DRAWINGS.
4. SEE SCHEDULE ON S0-0-4 FOR REINFORCING REQUIREMENTS AT SHEAR WALLS.
5. SEE DETAILS ON S0-0-4 FOR ADDITIONAL REINFORCING REQUIRED AT OPENINGS IN WALLS, CONTROL JOINT ARRANGEMENTS, ETC.
6. SEE MASONRY LINTEL DETAIL AND SCHEDULE ON S0-0-4 FOR REINFORCING REQUIREMENTS.
7. SEE DETAIL 6 ON S0-0-5 FOR REQUIREMENTS OF WELDABLE COUPLERS ALONG STRUCTURAL STEEL COLUMNS AND BEAMS AT CMU SHEAR WALLS.
8. COORDINATE ADDITIONAL BOND-BEAMS AND REINFORCING REQUIRED WITHIN SHEAR WALLS WITH VARIOUS SECTIONS ON THE STRUCTURAL CONTRACT DRAWINGS.

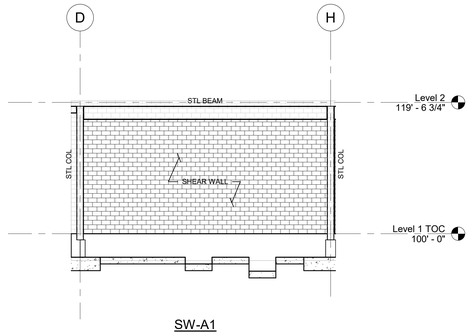

SW-A1
ALONG GRIDLINE 3

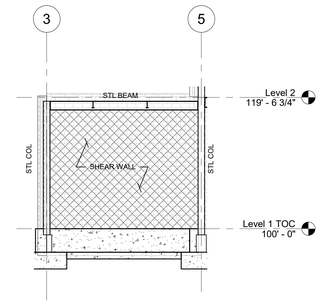

SW-A2
ALONG GRIDLINE J.9

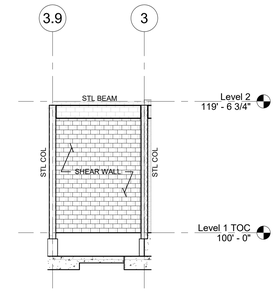

SW-A3
ALONG GRIDLINE D

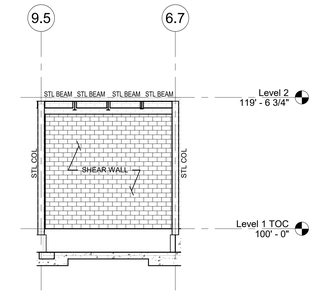

SW-A4
ALONG GRIDLINE B

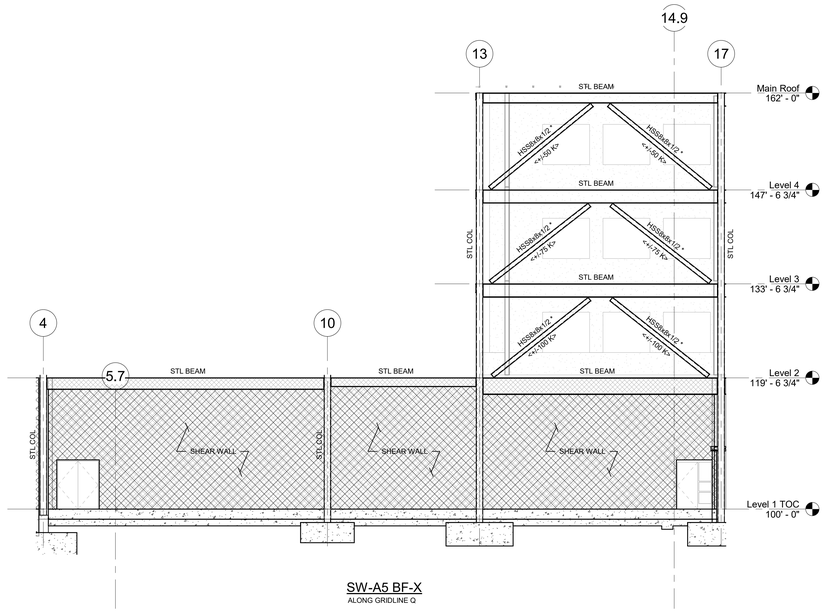

SW-A5 BF-X
ALONG GRIDLINE Q

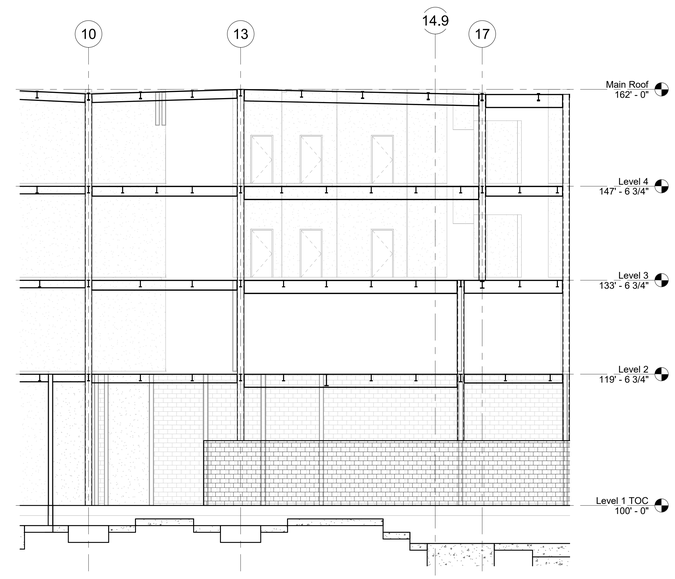

SW-A6
ALONG GRIDLINE M

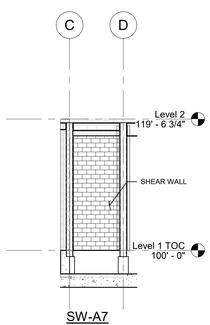

SW-A7
ALONG GRIDLINE 3.9

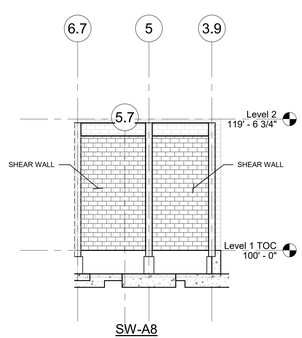

SW-A8
ALONG GRIDLINE C

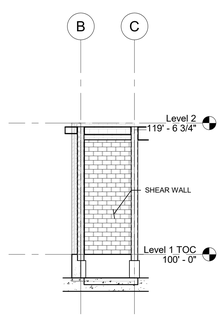

SW-A9
ALONG GRIDLINE 6.7

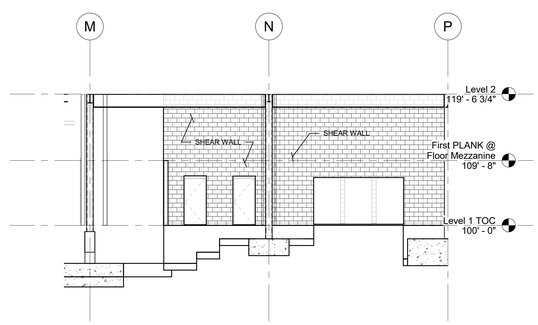

SW-A10
ALONG GRIDLINE 21

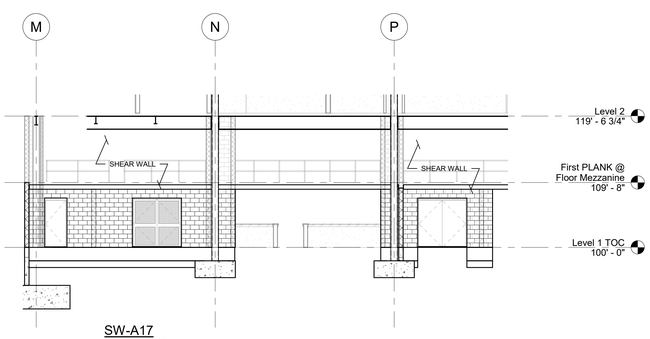

SW-A17
ALONG GRIDLINE 17

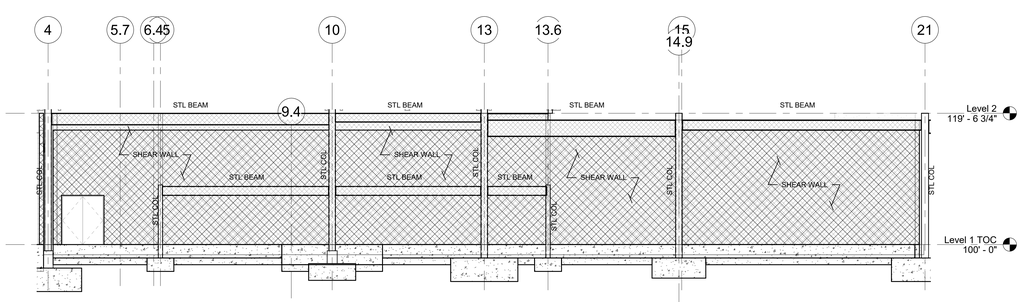

SW-B1
ALONG GRIDLINE T

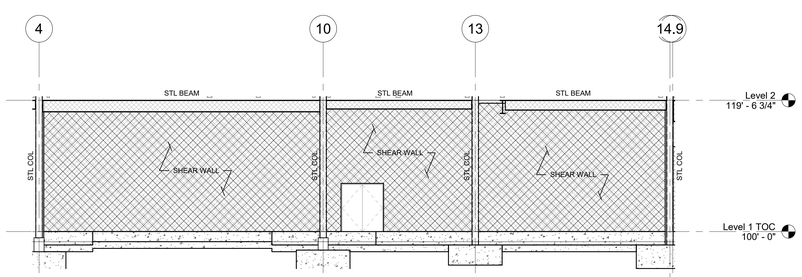

SW-B2
ALONG GRIDLINE W

DRA
Drummey Rosane Anderson, Inc.
225 Oakland Road
Studio 205
South Windsor, CT
06074
260 Charles Street
Studio 300
Waltham, MA
02453
Planning | Architecture | Interior Design
Tel: 617.964.1700
www.draiwa.com

NORTHEAST METRO TECH

100 Hemlock Rd,
Wakefield, MA 01880

EDG
Engineers Design Group Inc.
Structural Engineers
389 Main Street, Suite 401
Malden, MA 02148
(781)396-9007
EDG@EDGINC.COM

REVISION LIST

FOR REFERENCE ONLY
SCOPE OF WORK ON THIS DRAWING IS A PART OF EARLY STRUCTURAL BID PACKAGE

© COPYRIGHT 2021 DRUMMEY ROSANE ANDERSON, INC.

MSBA 90% CD SUBMISSION

MAY 12, 2023

KEY PLAN

PROJECT NORTH

MAGNETIC NORTH

SHEAR WALLS

Scale: 1/8" = 1'-0"
Job No.: 20202
Drawn By: EDG
Date: MAY 12, 2023

S4-0-5

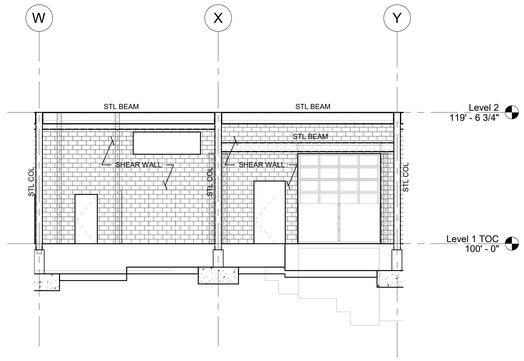

SW-B3
ALONG GRIDLINE 1

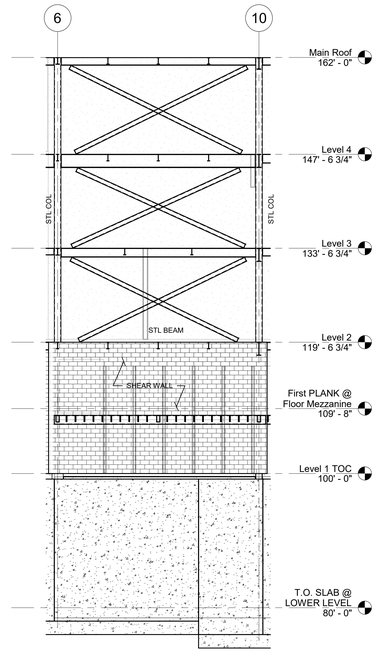

SW-B4
ALONG GRIDLINE Y.9

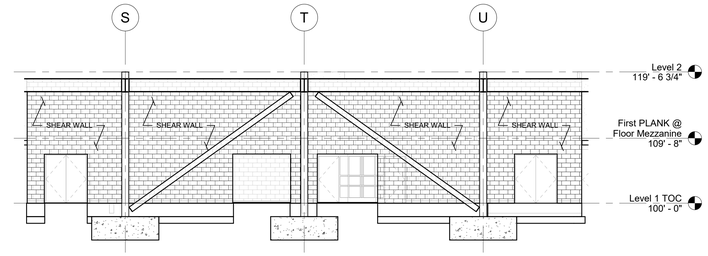

SW-B5
ALONG GRIDLINE 21

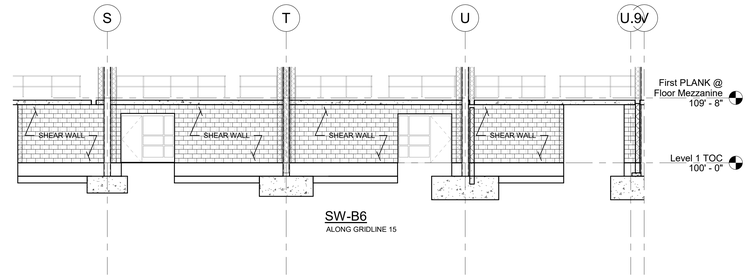

SW-B6
ALONG GRIDLINE 15

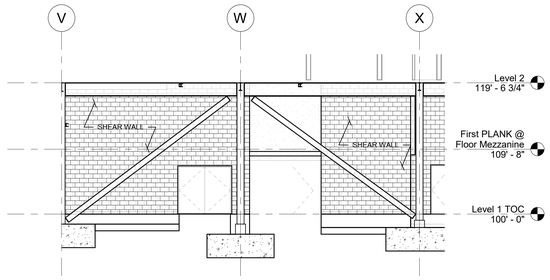

SW-B7
ALONG GRIDLINE 21

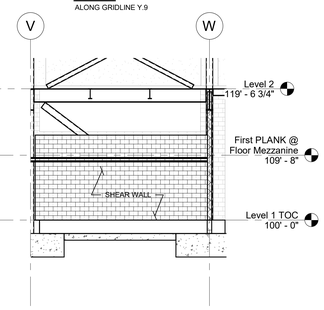

SW-B8
ALONG GRIDLINE 15

FIREPROOFING NOTES:

1. STEEL COLUMNS SHOWN ON THIS DRAWING SHALL RECEIVE 2-HOUR FIRE RATING BY CEMENTITIOUS FIREPROOFING UNLESS INDICATED AS A ROUND HSS COLUMN. EXPOSED TO VIEW PORTION OF ROUND HSS COLUMNS SHALL RECEIVE 2-HOUR FIRE RATING BY INTUMESCENT MASTIC FIREPROOFING. CONCEALED FROM VIEW PORTION OF ROUND HSS COLUMN SHALL RECEIVE 2-HOUR FIRE RATING BY CEMENTITIOUS FIREPROOFING.
2. CONCEALED FROM VIEW BRACED FRAME MEMBERS SHALL RECEIVE 2-HOUR FIRE RATING BY CEMENTITIOUS FIREPROOFING .
3. EXPOSED TO VIEW BRACED FRAME MEMBERS SHALL RECEIVE 2-HOUR FIRE RATING BY INTUMENCENT MASTIC FIREPROOFING.
4. COORDINATE FIREPROOFING REQUIREMENTS WITH THE SPECIFICATIONS AND ARCHITECTURAL DRAWINGS.

SHEAR WALL NOTES:

1. ELEVATIONS ARE SCHEMATIC ONLY, AND INTENDED TO SHOW CONFIGURATION OF SHEAR WALLS.
2. SEE PLANS FOR COLUMN AND BEAM SIZES.
3. COORDINATE LOCATIONS OF OPENINGS WITHIN WALLS WITH ARCHITECTURAL DRAWINGS.
4. SEE SCHEDULE ON S0-0-4 FOR REINFORCING REQUIREMENTS AT SHEAR WALLS.
5. SEE DETAILS ON S0-0-4 FOR ADDITIONAL REINFORCING REQUIRED AT OPENINGS IN WALLS, CONTROL JOINT ARRANGEMENTS, ETC.
6. SEE MASONRY LINTEL DETAIL AND SCHEDULE ON S0-0-4 FOR REINFORCING REQUIREMENTS.
7. SEE DETAIL 6 ON S0-0-5 FOR REQUIREMENTS OF WELDABLE COUPLERS ALONG STRUCTURAL STEEL COLUMNS AND BEAMS AT CMU SHEAR WALLS.
8. COORDINATE ADDITIONAL BOND-BEAMS AND REINFORCING REQUIRED WITHIN SHEAR WALLS WITH VARIOUS SECTIONS ON THE STRUCTURAL CONTRACT DRAWINGS.

BRACE FRAME NOTES:

1.) FABRICATOR IS RESPONSIBLE FOR BRACE CONNECTION DESIGN.

2.) ELEVATIONS ARE SCHEMATIC ONLY AND INTENDED TO SHOW CONFIGURATION OF BRACED FRAMES AND BRACE FORCES.

3.) DESIGN DIAGONAL MEMBER CONNECTIONS FOR TWICE THE AXIAL DESIGN FORCE SHOWN BELOW EACH MEMBER <30k> (TENSION OR COMPRESSION). AXIAL DESIGN FORCE IS BASED ON LRFD. USE GENERAL UNIFORM FORCE METHOD FOR CONNECTION DESIGN.

4.) DO NOT WELD TOP END OF DIAGONAL BRACE MEMBERS IN PLACE UNTIL FLOOR SLABS AND ROOFING ARE IN PLACE. WELDS MUST BE FULLY INSPECTED AND APPROVED PRIOR TO PLACING ANY CONCRETE OR INSTALLING OTHER MATERIALS THAT WOULD COVER THE CONNECTIONS.

5.) BOLTED CONNECTIONS IN BRACED FRAMES SHALL BE DESIGNED AS SLIP CRITICAL CONNECTIONS.

6.) SEE PLANS FOR COLUMN AND BEAM SIZES.

7.) CENTERLINE OF BRACE MEMBER SHALL BE OFFSET FROM WORKPOINT LINE AS NOTED AS SHOWN ON ELEVATION.

8.) * SYMBOL AT THE END OF A STEEL BEAM SIZE (HSS*, WF*, ETC.) DENOTES EXPOSED BRACE FRAME MEMBERS, (INCLUDING STEEL BEAMS AND COLUMNS) TO RECEIVE INTUMESCENT MASTIC FIREPROOFING.

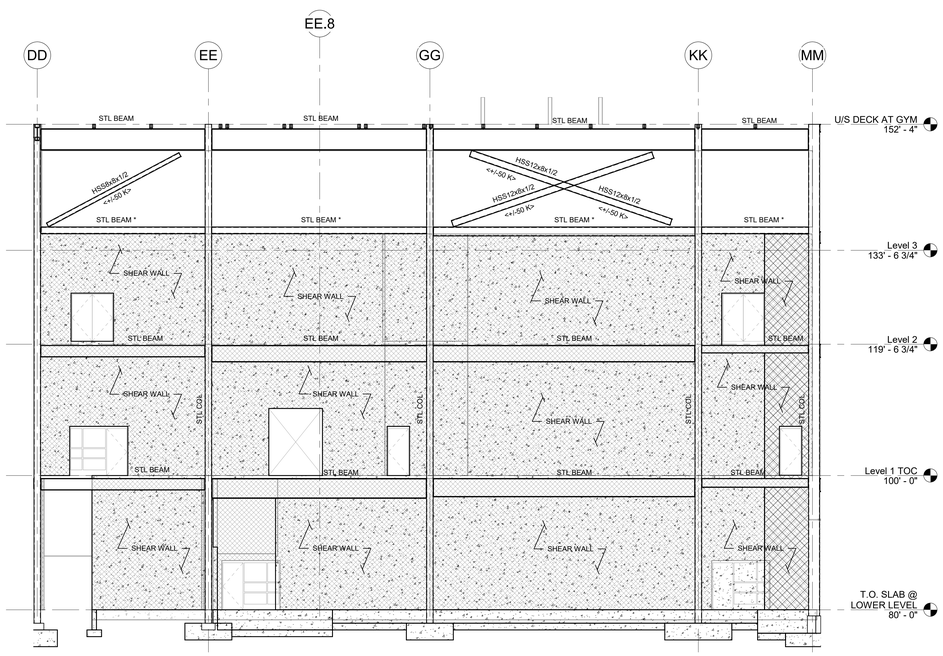

(SEE NOTE #7)
SW-C1
ALONG GRIDLINE 22

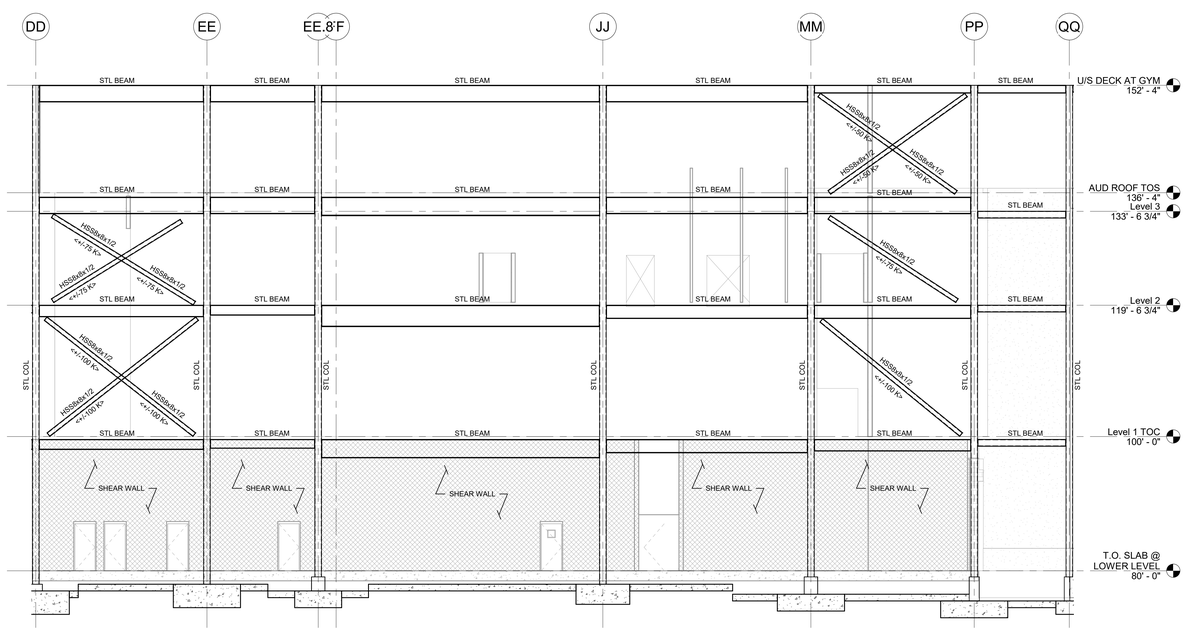

BF-C4 AND SW-C2
ALONG GRIDLINE 20

DRA

Drummey Rosane Anderson, Inc.

225 Oakland Road
Studio 205
South Windsor, CT
06074

260 Charles Street
Studio 300
Waltham, MA
02453

Planning | Architecture | Interior Design

Tel: 617-964-1700
www.draiwa.com

NORTHEAST METRO TECH

100 Hemlock Rd,
Wakefield, MA 01880

EDG
Engineers Design Group Inc.
Structural Engineers
389 Main Street, Suite 401
Malden, MA 02148
(781)396-9007
EDG@EDGINC.COM

REVISION LIST

© COPYRIGHT 2021 DRUMMEY ROSANE ANDERSON, INC.

FOR REFERENCE ONLY
SCOPE OF WORK ON THIS DRAWING IS A PART OF EARLY STRUCTURAL BID PACKAGE

MSBA 90% CD SUBMISSION

MAY 12, 2023

KEY PLAN

PROJECT NORTH

MAGNETIC NORTH

SHEAR WALLS

Scale: 1/8" = 1'-0"
Job No.: 20202
Drawn By: EDG
Date: MAY 12, 2023

S4-0-6

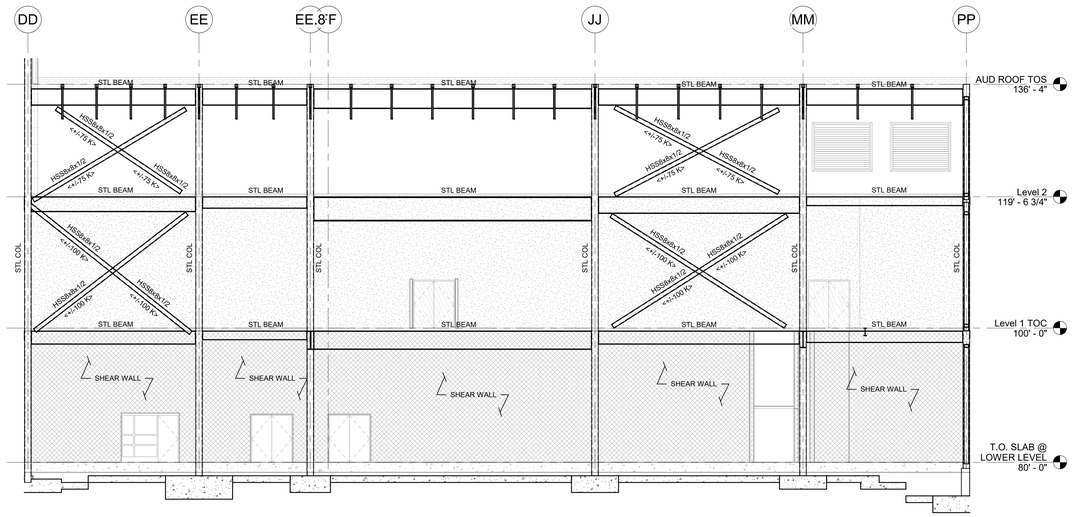

BF-C5 AND SW-C3

ALONG GRIDLINE 11

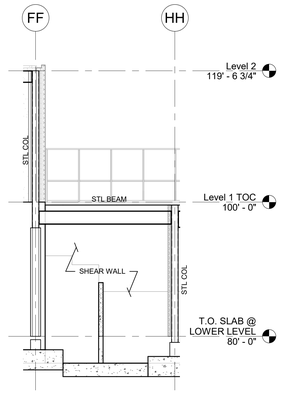

SW-C4

ALONG GRIDLINE 2

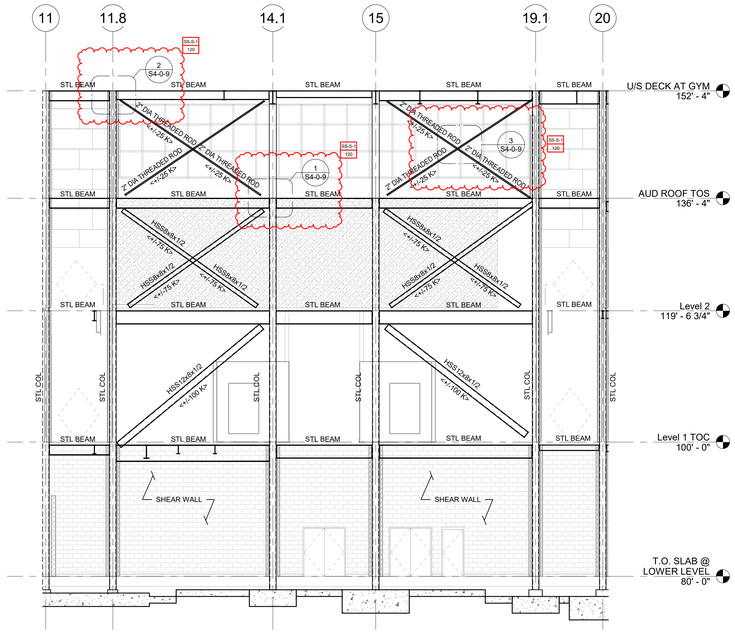

BF-C6 AND SW-C5

ALONG GRIDLINE DD

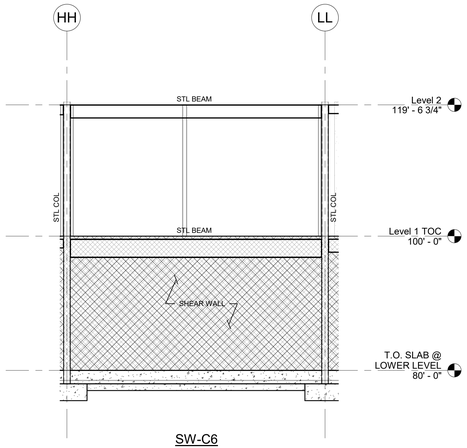

SW-C6

ALONG GRIDLINE 9

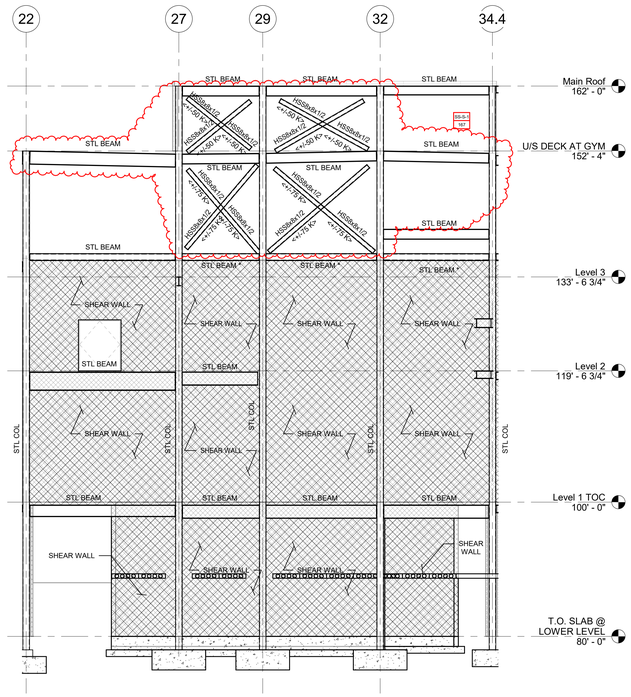

BF-D3 AND SW-D1

ALONG GRIDLINE DD

SHEAR WALL NOTES:

1. ELEVATIONS ARE SCHEMATIC ONLY, AND INTENDED TO SHOW CONFIGURATION OF SHEAR WALLS.
2. SEE PLANS FOR COLUMN AND BEAM SIZES.
3. COORDINATE LOCATIONS OF OPENINGS WITHIN WALLS WITH ARCHITECTURAL DRAWINGS.
4. SEE SCHEDULE ON S0-0-4 FOR REINFORCING REQUIREMENTS AT SHEAR WALLS.
5. SEE DETAILS ON S0-0-4 FOR ADDITIONAL REINFORCING REQUIRED AT OPENINGS IN WALLS, CONTROL JOINT ARRANGEMENTS, ETC.
6. SEE MASONRY LINTEL DETAIL AND SCHEDULE ON S0-0-4 FOR REINFORCING REQUIREMENTS.
7. SEE DETAIL 6 ON S0-0-5 FOR REQUIREMENTS OF WELDABLE COUPLERS ALONG STRUCTURAL STEEL COLUMNS AND BEAMS AT CMU SHEAR WALLS.
8. COORDINATE ADDITIONAL BOND-BEAMS AND REINFORCING REQUIRED WITHIN SHEAR WALLS WITH VARIOUS SECTIONS ON THE STRUCTURAL CONTRACT DRAWINGS.

BRACE FRAME NOTES:

1.) FABRICATOR IS RESPONSIBLE FOR BRACE CONNECTION DESIGN.

2.) ELEVATIONS ARE SCHEMATIC ONLY AND INTENDED TO SHOW CONFIGURATION OF BRACED FRAMES AND BRACE FORCES.

3.) DESIGN DIAGONAL MEMBER CONNECTIONS FOR TWICE THE AXIAL DESIGN FORCE SHOWN BELOW EACH MEMBER <30k> (TENSION OR COMPRESSION). AXIAL DESIGN FORCE IS BASED ON LRFD. USE GENERAL UNIFORM FORCE METHOD FOR CONNECTION DESIGN.

4.) DO NOT WELD TOP END OF DIAGONAL BRACE MEMBERS IN PLACE UNTIL FLOOR SLABS AND ROOFING ARE IN PLACE. WELDS MUST BE FULLY INSPECTED AND APPROVED PRIOR TO PLACING ANY CONCRETE OR INSTALLING OTHER MATERIALS THAT WOULD COVER THE CONNECTIONS.

5.) BOLTED CONNECTIONS IN BRACED FRAMES SHALL BE DESIGNED AS SLIP CRITICAL CONNECTIONS.

6.) SEE PLANS FOR COLUMN AND BEAM SIZES.

7.) CENTERLINE OF BRACE MEMBER SHALL BE OFFSET FROM WORKPOINT LINE AS NOTED AS SHOWN ON ELEVATION.

8.) * SYMBOL AT THE END OF A STEEL BEAM SIZE (HSS*, WF*, ETC.) DENOTES EXPOSED BRACE FRAME MEMBERS, (INCLUDING STEEL BEAMS AND COLUMNS) TO RECEIVE INTUMESCENT MASTIC FIREPROOFING.

FIREPROOFING NOTES:

1. STEEL COLUMNS SHOWN ON THIS DRAWING SHALL RECEIVE 2-HOUR FIRE RATING BY CEMENTITIOUS FIREPROOFING UNLESS INDICATED AS A ROUND HSS COLUMN. EXPOSED TO VIEW PORTION OF ROUND HSS COLUMNS SHALL RECEIVE 2-HOUR FIRE RATING BY INTUMESCENT MASTIC FIREPROOFING. CONCEALED FROM VIEW PORTION OF ROUND HSS COLUMN SHALL RECEIVE 2-HOUR FIRE RATING BY CEMENTITIOUS FIREPROOFING.
2. CONCEALED FROM VIEW BRACED FRAME MEMBERS SHALL RECEIVE 2-HOUR FIRE RATING BY CEMENTITIOUS FIREPROOFING .
3. EXPOSED TO VIEW BRACED FRAME MEMBERS SHALL RECEIVE 2-HOUR FIRE RATING BY INTUMENCENT MASTIC FIREPROOFING.
4. COORDINATE FIREPROOFING REQUIREMENTS WITH THE SPECIFICATIONS AND ARCHITECTURAL DRAWINGS.

DRA
Drummey Rosane Anderson, Inc.
225 Oakland Road
Studio 205
South Windsor, CT
06074
260 Charles Street
Studio 300
Waltham, MA
02453
Planning | Architecture | Interior Design
Tel: 617.964.1700
www.draiwa.com

NORTHEAST METRO TECH

100 Hemlock Rd,
Wakefield, MA 01880

EDG
Engineers Design Group Inc.
Structural Engineers
389 Main Street, Suite 401
Malden, MA 02148
(781)396-9007
EDG@EDGINC.COM

REVISION LIST

SS-S-1	4/14/2023	STRUCTURAL STEEL ADDENDUM 1

© COPYRIGHT 2021 DRUMMEY ROSANE ANDERSON, INC.

FOR REFERENCE ONLY
SCOPE OF WORK ON THIS DRAWING IS A PART OF EARLY STRUCTURAL BID PACKAGE

MSBA 90% CD SUBMISSION

MAY 12, 2023

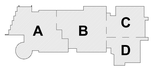

KEY PLAN

PROJECT NORTH

MAGNETIC NORTH

SHEAR WALLS

Scale: 1/8" = 1'-0"
Job No.: 20202
Drawn By: EDG
Date: MAY 12, 2023

S4-0-7

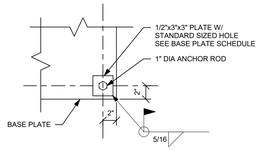

BASE PLATE DETAIL

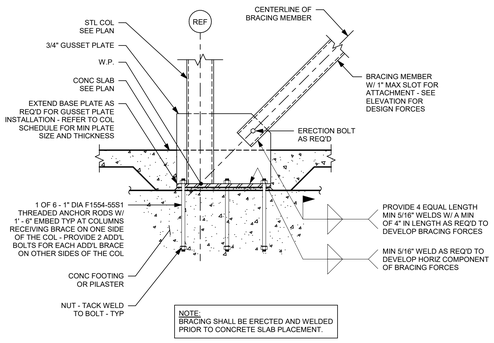

NOTE:
BRACING SHALL BE ERECTED AND WELDED PRIOR TO CONCRETE SLAB PLACEMENT.

1

3/4" = 1' - 0"

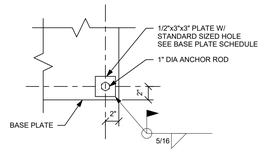

BASE PLATE DETAIL

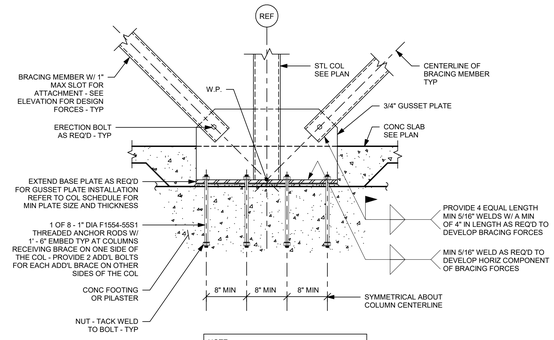

NOTE:
BRACING SHALL BE ERECTED AND WELDED PRIOR TO CONCRETE SLAB PLACEMENT.

2

3/4" = 1' - 0"

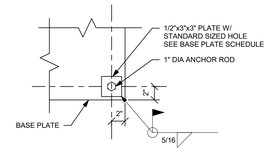

BASE PLATE DETAIL

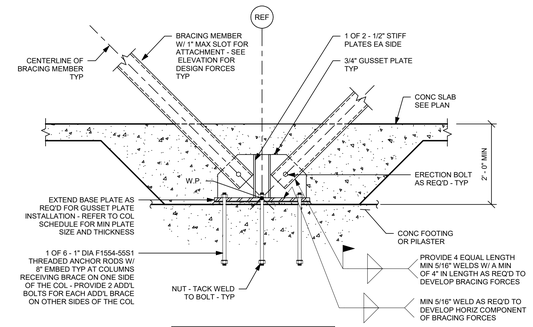

NOTE:
BRACING SHALL BE ERECTED AND WELDED PRIOR TO CONCRETE SLAB PLACEMENT.

3

3/4" = 1' - 0"

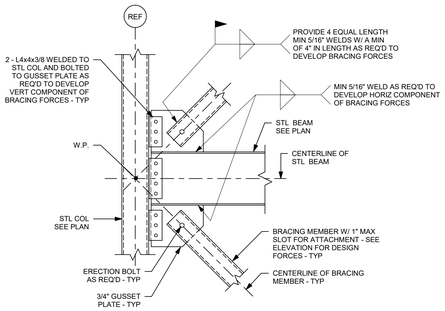

NOTES:

1.) PROVIDE ROUNDED GUSSET PLATES AT EXPOSED BRACED FRAMES.

2.) REFER TO SPECIFICATIONS AND "EXPOSED STEEL NOTES" ON DRAWING S0-0-1 FOR ADDITIONAL REQUIREMENTS OF EXPOSED BRACED FRAMES. SS-S-1 154

3.) COORDINATE WITH BRACE FRAME ELEVATIONS AND ARCHITECTURAL DRAWINGS FOR LOCATIONS OF EXPOSED BRACED FRAME MEMBERS.

4

3/4" = 1' - 0"

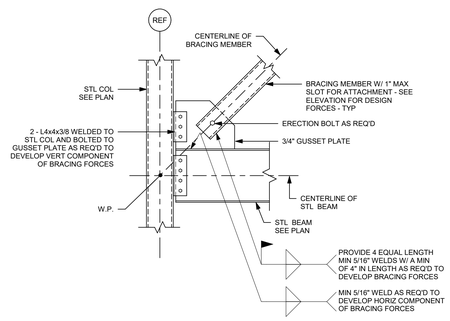

NOTES:

1.) PROVIDE ROUNDED GUSSET PLATES AT EXPOSED BRACED FRAMES.

2.) REFER TO SPECIFICATIONS AND "EXPOSED STEEL NOTES" ON DRAWING S0-0-1 FOR ADDITIONAL REQUIREMENTS OF EXPOSED BRACED FRAMES. SS-S-1 155

3.) COORDINATE WITH BRACE FRAME ELEVATIONS AND ARCHITECTURAL DRAWINGS FOR LOCATIONS OF EXPOSED BRACED FRAME MEMBERS.

5

3/4" = 1' - 0"

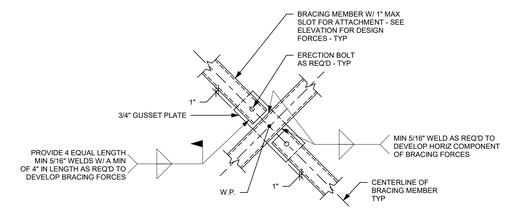

NOTES:

1.) PROVIDE ROUNDED GUSSET PLATES AT EXPOSED BRACED FRAMES.

2.) REFER TO SPECIFICATIONS AND "EXPOSED STEEL NOTES" ON DRAWING S0-0-1 FOR ADDITIONAL REQUIREMENTS OF EXPOSED BRACED FRAMES. SS-S-1 156

3.) COORDINATE WITH BRACE FRAME ELEVATIONS AND ARCHITECTURAL DRAWINGS FOR LOCATIONS OF EXPOSED BRACED FRAME MEMBERS.

4.) REFER TO ARCHITECTURAL DRAWINGS AND DETAILS FOR FINISHES AND ADDITIONAL INFORMATION.

5.) PROVIDE CONTINUOUS WELD WITH NO GAPS. SHOP SLOTS PROVIDED IN THE BRACE TO BE FULLY WELDED IN THE FIELD WITH NO GAPS AND GROUND SMOOTH.

6

3/4" = 1' - 0"

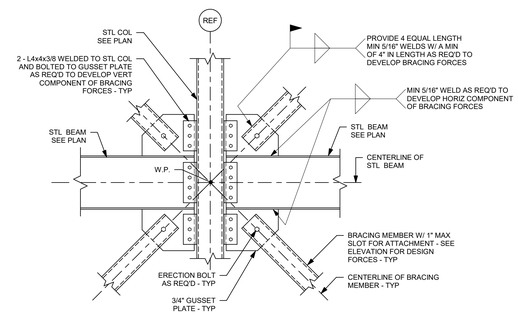

NOTES:

1.) PROVIDE ROUNDED GUSSET PLATES AT EXPOSED BRACED FRAMES.

2.) REFER TO SPECIFICATIONS AND "EXPOSED STEEL NOTES" ON DRAWING S0-0-1 FOR ADDITIONAL REQUIREMENTS OF EXPOSED BRACED FRAMES. SS-S-1 157

3.) COORDINATE WITH BRACE FRAME ELEVATIONS AND ARCHITECTURAL DRAWINGS FOR LOCATIONS OF EXPOSED BRACED FRAME MEMBERS.

7

3/4" = 1' - 0"

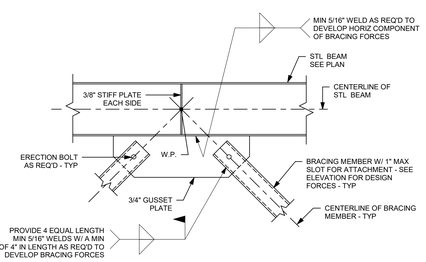

NOTES:

1.) PROVIDE ROUNDED GUSSET PLATES AT EXPOSED BRACED FRAMES.

2.) REFER TO SPECIFICATIONS AND "EXPOSED STEEL NOTES" ON DRAWING S0-0-1 FOR ADDITIONAL REQUIREMENTS OF EXPOSED BRACED FRAMES. SS-S-1 158

3.) COORDINATE WITH BRACE FRAME ELEVATIONS AND ARCHITECTURAL DRAWINGS FOR LOCATIONS OF EXPOSED BRACED FRAME MEMBERS.

8

3/4" = 1' - 0"

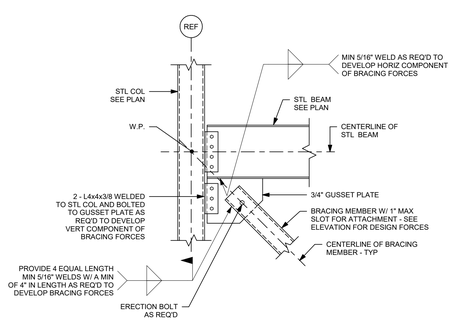

NOTES:

1.) PROVIDE ROUNDED GUSSET PLATES AT EXPOSED BRACED FRAMES.

2.) REFER TO SPECIFICATIONS AND "EXPOSED STEEL NOTES" ON DRAWING S0-0-1 FOR ADDITIONAL REQUIREMENTS OF EXPOSED BRACED FRAMES. SS-S-1 159

3.) COORDINATE WITH BRACE FRAME ELEVATIONS AND ARCHITECTURAL DRAWINGS FOR LOCATIONS OF EXPOSED BRACED FRAME MEMBERS.

9

3/4" = 1' - 0"

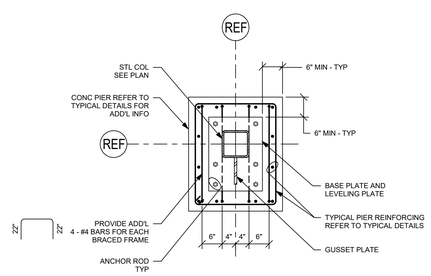

BRACE IN ONE DIRECTION AT PIER

NOTE:
THIS DETAIL APPLIES TO BRACE FRAMED COLUMNS BEARING DIRECTLY ON PIERS.

10

3/4" = 1' - 0"

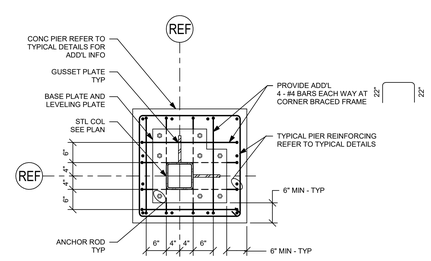

BRACE IN TWO DIRECTIONS AT PIER

NOTE:
THIS DETAIL APPLIES TO BRACE FRAMED COLUMNS BEARING DIRECTLY ON PIERS.

11

3/4" = 1' - 0"

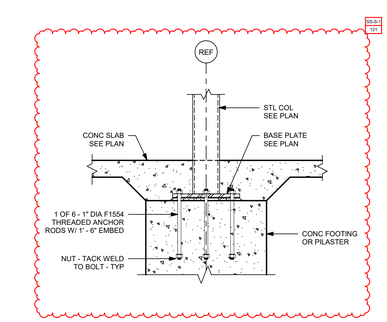

12

3/4" = 1' - 0"

DRA
Drummey Rosane Anderson, Inc.
225 Oakland Road
Studio 205
South Windsor, CT
06074
260 Charles Street
Studio 300
Waltham, MA
02453
Planning | Architecture | Interior Design
Tel: 617-964-1700
www.draiwa.com

NORTHEAST METRO TECH

100 Hemlock Rd,
Wakefield, MA 01880

EDG
Engineers Design Group Inc.
Structural Engineers
389 Main Street, Suite 401
Malden, MA 02148
(781)396-9007
EDG@EDGINC.COM

REVISION LIST

SS-S-1	4/14/2023	STRUCTURAL STEEL ADDENDUM 1

FOR REFERENCE ONLY
SCOPE OF WORK ON THIS DRAWING IS A PART OF EARLY STRUCTURAL BID PACKAGE

© COPYRIGHT 2021 DRUMMEY ROSANE ANDERSON, INC.

MSBA 90% CD SUBMISSION

MAY 12, 2023

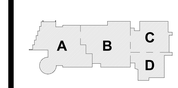

KEY PLAN

PROJECT NORTH | MAGNETIC NORTH

BRACED FRAME DETAILS

Scale: 3/4" = 1'-0"
Job No.: 20202
Drawn By: EDG
Date: MAY 12, 2023

S4-0-8

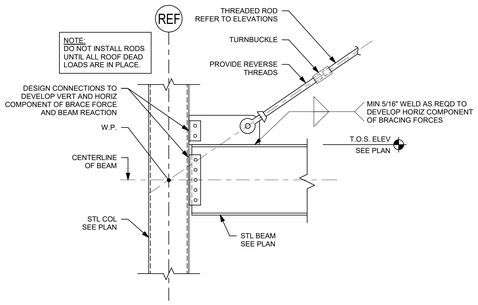

NOTE:
DO NOT INSTALL RODS UNTIL ALL ROOF DEAD LOADS ARE IN PLACE.

NOTES:

1.) PROVIDE ROUNDED GUSSET PLATES AT EXPOSED BRACED FRAMES.

2.) REFER TO SPECIFICATIONS AND "EXPOSED STEEL NOTES" ON DRAWING S0-0-1 FOR ADDITIONAL REQUIREMENTS OF EXPOSED BRACED FRAMES.

3.) COORDINATE WITH BRACE FRAME ELEVATIONS AND ARCHITECTURAL DRAWINGS FOR LOCATIONS OF EXPOSED BRACED FRAME MEMBERS.

SS-S-1 102

1 3/4" = 1' - 0"

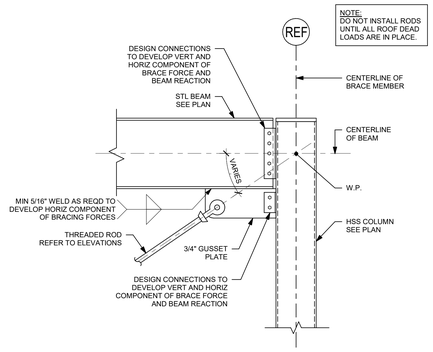

NOTE:
DO NOT INSTALL RODS UNTIL ALL ROOF DEAD LOADS ARE IN PLACE.

NOTES:

1.) PROVIDE ROUNDED GUSSET PLATES AT EXPOSED BRACED FRAMES.

2.) REFER TO SPECIFICATIONS AND "EXPOSED STEEL NOTES" ON DRAWING S0-0-1 FOR ADDITIONAL REQUIREMENTS OF EXPOSED BRACED FRAMES.

3.) COORDINATE WITH BRACE FRAME ELEVATIONS AND ARCHITECTURAL DRAWINGS FOR LOCATIONS OF EXPOSED BRACED FRAME MEMBERS.

SS-S-1 102

2 3/4" = 1' - 0"

NOTES:

1.) COORDINATE ALL DIMENSIONS AND FINISHES WITH ARCHITECTURAL DRAWINGS.

2.) SEE ARCHITECTURAL DRAWINGS FOR ADDITIONAL INFORMATION.

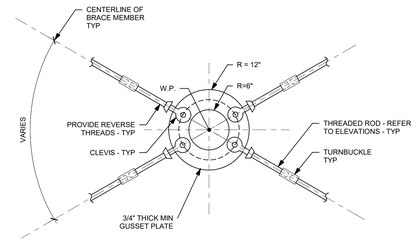

NOTES:

1.) PROVIDE ROUNDED GUSSET PLATES AT EXPOSED BRACED FRAMES.

2.) REFER TO SPECIFICATIONS AND "EXPOSED STEEL NOTES" ON DRAWING S0-0-1 FOR ADDITIONAL REQUIREMENTS OF EXPOSED BRACED FRAMES.

3.) COORDINATE WITH BRACE FRAME ELEVATIONS AND ARCHITECTURAL DRAWINGS FOR LOCATIONS OF EXPOSED BRACED FRAME MEMBERS.

SS-S-1 102

3 3/4" = 1' - 0"

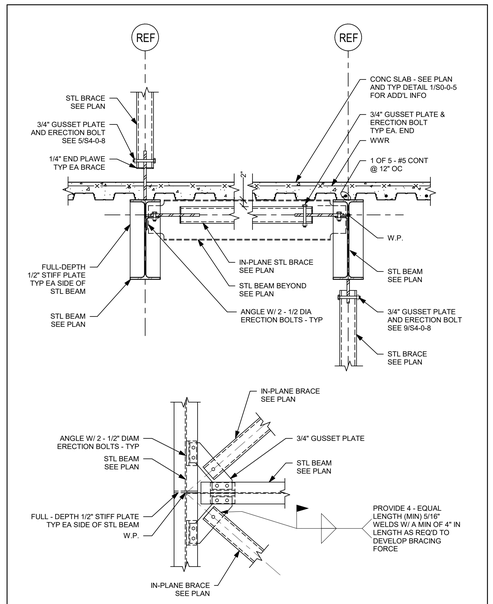

4 3/4" = 1' - 0"

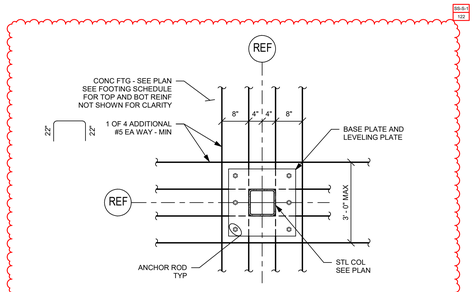

SS-S-1 102

COLUMN AT BRACED FRAME WITHOUT BRACES AT FOOTING

NOTE:
THIS DETAIL APPLIES TO BRACE FRAMED COLUMNS BEARING DIRECTLY ON FOOTING.

5 3/4" = 1' - 0"

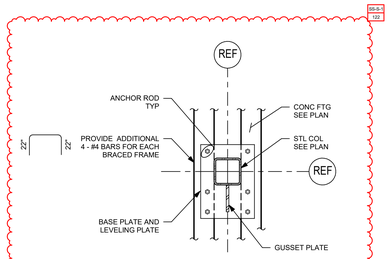

SS-S-1 102

BRACED FRAME IN ONE DIRECTION AT FOOTING

NOTE:
THIS DETAIL APPLIES TO BRACE FRAMED COLUMNS BEARING DIRECTLY ON FOOTING.

6 3/4" = 1' - 0"

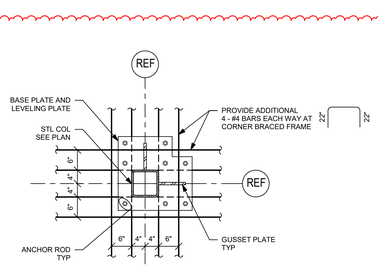

SS-S-1 102

BRACED FRAME IN TWO DIRECTIONS AT FOOTING

NOTE:
THIS DETAIL APPLIES TO BRACE FRAMED COLUMNS BEARING DIRECTLY ON FOOTING.

7 3/4" = 1' - 0"

8 3/4" = 1' - 0"

9 3/4" = 1' - 0"

10 3/4" = 1' - 0"

11 3/4" = 1' - 0"

12 3/4" = 1' - 0"

DRA

Drummey Rosane Anderson, Inc.

225 Oakland Road
Studio 205
South Windsor, CT
06074

260 Charles Street
Studio 300
Waltham, MA
02453

Planning | Architecture | Interior Design

Tel: 617-964-1700
www.draiwa.com

NORTHEAST METRO TECH

100 Hemlock Rd,
Wakefield, MA 01880

EDG

Engineers Design Group Inc.
Structural Engineers
389 Main Street, Suite 401
Malden, MA 02148
(781)396-9007
EDG@EDGINC.COM

REVISION LIST

SS-S-1	4/14/2023	STRUCTURAL STEEL ADDENDUM 1

FOR REFERENCE ONLY
SCOPE OF WORK ON THIS DRAWING IS A PART OF EARLY STRUCTURAL BID PACKAGE

© COPYRIGHT 2021 DRUMMEY ROSANE ANDERSON, INC.

MSBA 90% CD SUBMISSION

MAY 12, 2023

KEY PLAN

PROJECT NORTH

MAGNETIC NORTH

BRACED FRAME DETAILS

Scale: 3/4" = 1'-0"
Job No.: 20202
Drawn By: EDG
Date: MAY 12, 2023

S4-0-9

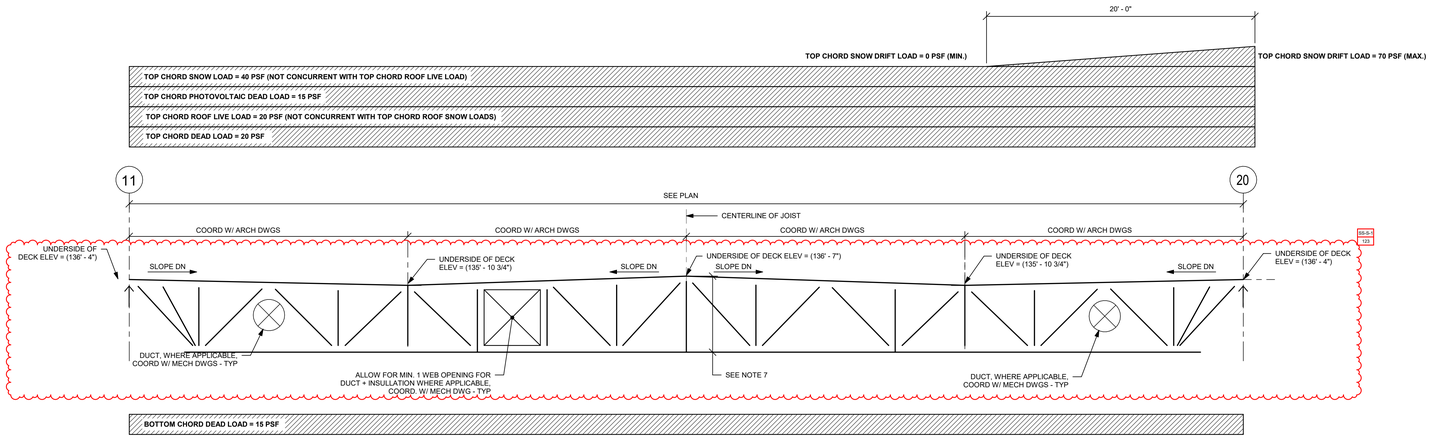

JOIST PROFILE AND LOAD DIAGRAM FOR 68DLHSP1

NOTE: SELF WEIGHT OF JOIST NOT INCLUDED IN LOADS

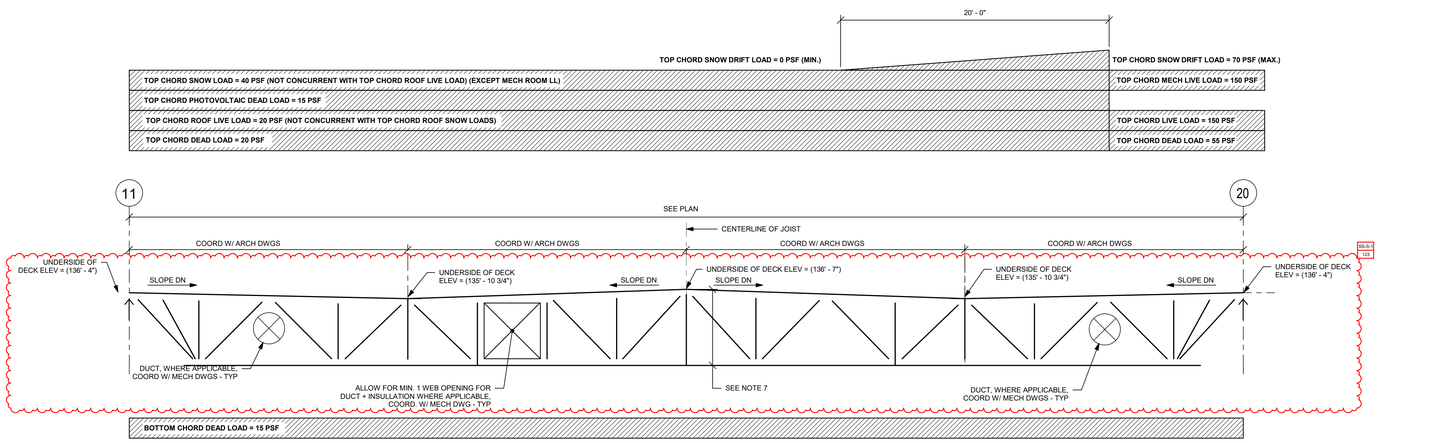

JOIST PROFILE AND LOAD DIAGRAM FOR 68DLHSP2

NOTE: SELF WEIGHT OF JOIST NOT INCLUDED IN LOADS

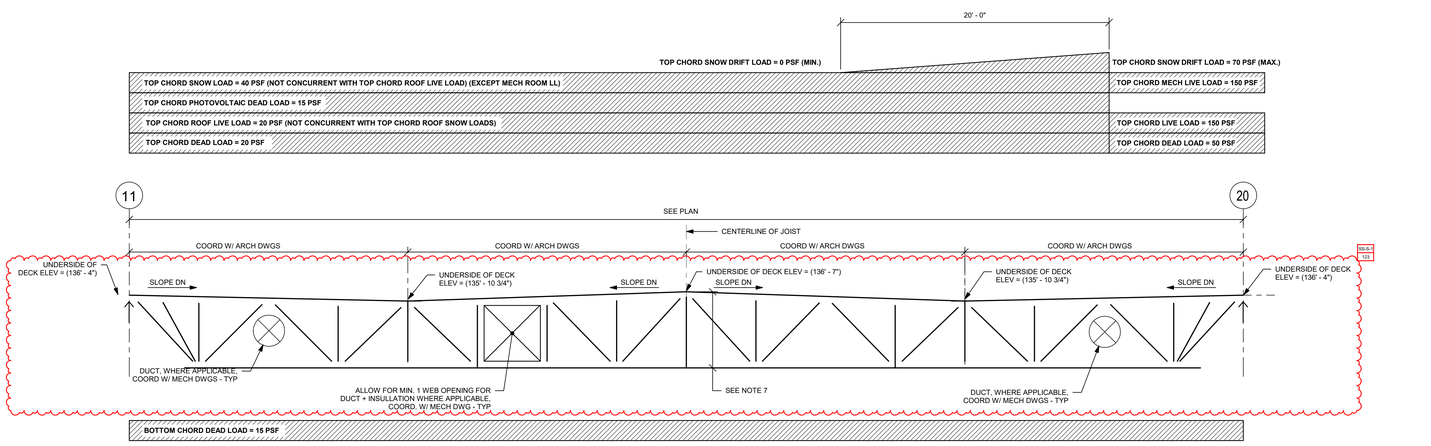

JOIST PROFILE AND LOAD DIAGRAM FOR 68DLHSP3

NOTE: SELF WEIGHT OF JOIST NOT INCLUDED IN LOADS

JOIST NOTES:

1.) JOIST SEAT DEPTH VARIES (8" MIN) AT CENTERLINE OF BEARING. COORDINATE WITH TOP OF STEEL BEAM.

2.) IN ADDITION TO THE LOADS SHOWN IN THE DIAGRAMS, DESIGN JOISTS AT THE GYMNASIUM FOR CONCENTRATED LOADS FROM MOTORIZED GYMNASIUM CURTAIN BATTING CAGE AND BASKETBALL BACKSTOP SUPPORT POINTS. REFER TO THE ARCHITECTURAL AND CEILING DRAWINGS. REFER TO MANUFACTURERS INFORMATION FOR LOAD MAGNITUDES AND LOCATIONS.

3.) REFER TO SPECIFICATIONS FOR UPLIFT LOAD ON THE JOISTS. DO NOT USE DESIGN DEAD LOAD TO OFFSET UPLIFT LOADS, ONLY SELF WEIGHT OF THE JOIST AND METAL ROOF DECK CAN BE USED TO OFFSET ANY UPLIFT LOADS.

4.) DESIGN FOR MAXIMUM LIVE LOADS DEFLECTION OF L / 360.

5.) DESIGN ALL JOISTS FOR ADDITIONAL UPWARD LOAD OF 200 POUNDS AT FIRST PANEL POINT AT EACH END OF JOIST.

6.) IN ADDITION TO THE SLOPE, PROVIDE CAMBER PER SJI.

7.) JOIST DEPTH DESIGNATION INDICATED AT THE HIGHEST POINT (AT MID-SPAN).

8.) JOIST SHALL BE TOP CHORD, QUADRUPLE PITCHED UNDER-SLUNG JOIST. JOISTS ARE SYMMETRICAL ABOUT THE MIDSPAN.

9.) JOIST WEB CONFIGURATION IS BY JOIST SUPPLIER. WEB CONFIGURATION SHALL BE COMPATIBLE WITH MECHANICAL DUCT LAYOUT AND CATWALK SUPPORTS.

10.) JOIST MANUFACTURER SHALL DESIGN AND ACCOUNT FOR JOIST CAMBER AND JOIST DEFLECTION TO LIMIT DIFFERENTIAL DEFLECTION OF ADJACENT JOISTS TO ALLOW FOR PROPER INSTALLATION OF MULTIPLE SPAN ROOF DECK WITHOUT FIELD CUTTING OF DECK. REDUCE CAMBER BY HALF AT JOISTS ADJACENT TOP STRUCTURAL STEEL FRAMING.

11.) ALIGN PANEL POINTS OF ALL JOISTS AS SHOWN IN JOIST PROFILES.

DRA

Drummey Rosane Anderson, Inc.

225 Oakland Road
Studio 205
South Windsor, CT
06074

260 Charles Street
Studio 300
Waltham, MA
02453

Planning | Architecture | Interior Design

Tel: 617-964-1700
www.draiwa.com

NORTHEAST METRO TECH

100 Hemlock Rd,
Wakefield, MA 01880

EDG
Engineers Design Group Inc.
Structural Engineers
389 Main Street, Suite 401
Malden, MA 02148
(781)396-9007
EDG@EDGINC.COM

REVISION LIST

SS-S-1	4/14/2023	STRUCTURAL STEEL ADDENDUM 1

FOR REFERENCE ONLY
SCOPE OF WORK ON THIS DRAWING IS A PART OF EARLY STRUCTURAL BID PACKAGE

© COPYRIGHT 2021 DRUMMEY ROSANE ANDERSON, INC.

MSBA 90% CD SUBMISSION

MAY 12, 2023

KEY PLAN

PROJECT NORTH

MAGNETIC NORTH

JOIST LOADING DIAGRAMS

Scale: As indicated
Job No.: 20202
Drawn By: EDG
Date: MAY 12, 2023

S5-0-1

JOIST NOTES:

1.) JOIST SEAT DEPTH VARIES (8" MIN) AT CENTERLINE OF BEARING. COORDINATE WITH TOP OF STEEL BEAM.

2.) IN ADDITION TO THE LOADS SHOWN IN THE DIAGRAMS, DESIGN JOISTS AT THE GYMNASIUM FOR CONCENTRATED LOADS FROM MOTORIZED GYMNASIUM CURTAIN BATTING CAGE AND BASKETBALL BACKSTOP SUPPORT POINTS. REFER TO THE ARCHITECTURAL AND CEILING DRAWINGS. REFER TO MANUFACTURERS INFORMATION FOR LOAD MAGNITUDES AND LOCATIONS.

3.) REFER TO SPECIFICATIONS FOR UPLIFT LOAD ON THE JOISTS. DO NOT USE DESIGN DEAD LOAD TO OFFSET UPLIFT LOADS. ONLY SELF WEIGHT OF THE JOIST AND METAL ROOF DECK CAN BE USED TO OFFSET ANY UPLIFT LOADS.

4.) DESIGN FOR MAXIMUM LIVE LOADS DEFLECTION OF L / 360.

5.) DESIGN ALL JOISTS FOR ADDITIONAL UPWARD LOAD OF 200 POUNDS AT FIRST PANEL POINT AT EACH END OF JOIST.

6.) IN ADDITION TO THE SLOPE, PROVIDE CAMBER PER SJI.

7.) JOIST DEPTH DESIGNATION INDICATED AT THE HIGHEST POINT (AT MID-SPAN).

8.) JOIST SHALL BE TOP CHORD, QUADRUPLE PITCHED UNDER-SLUNG JOIST. JOISTS ARE SYMMETRICAL ABOUT THE MIDSPAN.

9.) JOIST WEB CONFIGURATION IS BY JOIST SUPPLIER. WEB CONFIGURATION SHALL BE COMPATIBLE WITH MECHANICAL DUCT LAYOUT AND CATWALK SUPPORTS.

10.) JOIST MANUFACTURER SHALL DESIGN AND ACCOUNT FOR JOIST CAMBER AND JOIST DEFLECTION TO LIMIT DIFFERENTIAL DEFLECTION OF ADJACENT JOISTS TO ALLOW FOR PROPER INSTALLATION OF MULTIPLE SPAN ROOF DECK WITHOUT FIELD CUTTING OF DECK. REDUCE CAMBER BY HALF AT JOISTS ADJACENT TOP STRUCTURAL STEEL FRAMING.

11.) ALIGN PANEL POINTS OF ALL JOISTS AS SHOWN IN JOIST PROFILES.

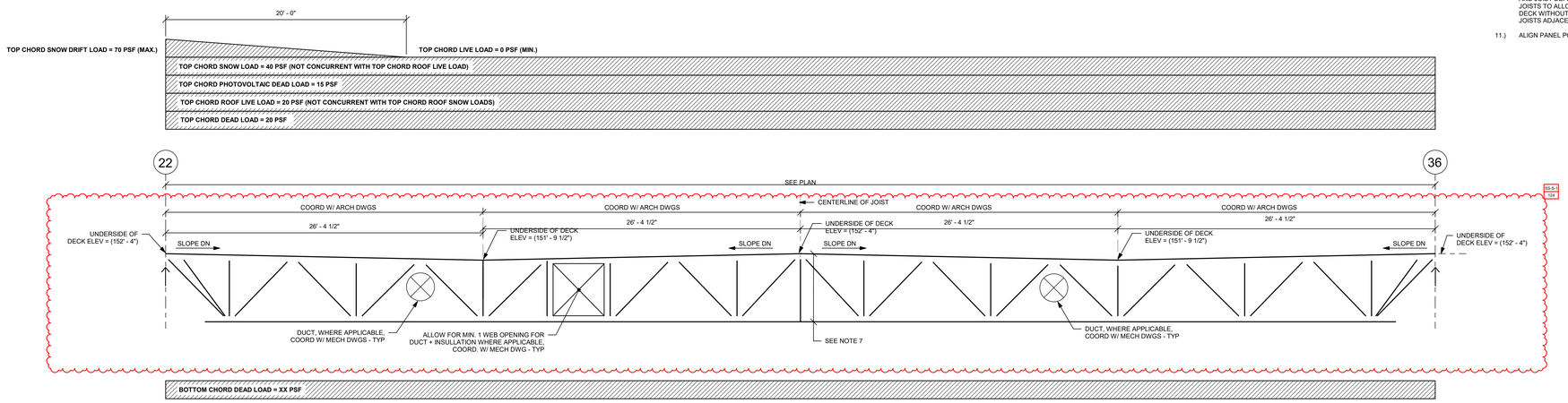

JOIST PROFILE AND LOAD DIAGRAM FOR 68DLHSP4

NOTE: SELF WEIGHT OF JOIST IS NOT INCLUDED IN LOADS

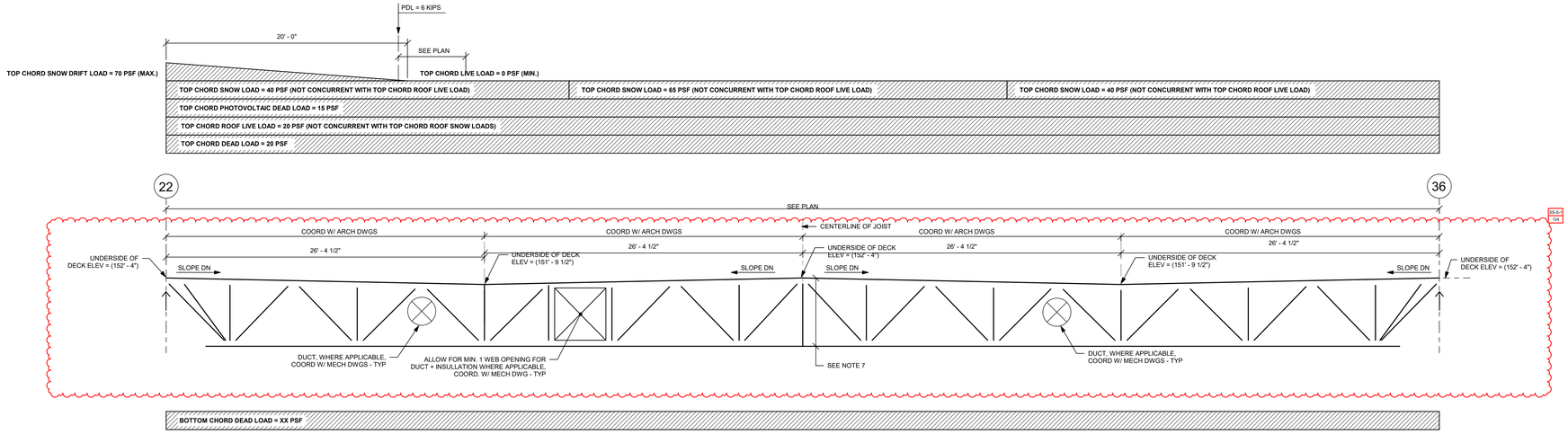

JOIST PROFILE AND LOAD DIAGRAM FOR 60DLHSP5

NOTE: SELF WEIGHT OF JOIST IS NOT INCLUDED IN LOADS

DRA

Drummey Rosane Anderson, Inc.

225 Oakland Road
Studio 205
South Windsor, CT
06074

260 Charles Street
Studio 300
Waltham, MA
02453

Planning | Architecture | Interior Design

Tel: 617-964-1700
www.draws.com

NORTHEAST METRO TECH

100 Hemlock Rd,
Wakefield, MA 01880

EDG

Engineers Design Group Inc.
Structural Engineers
389 Main Street, Suite 401
Malden, MA 02148
(781)396-9007
EDG@EDGINC.COM

REVISION LIST

SS-S-1	4/14/2023	STRUCTURAL STEEL ADDENDUM 1

FOR REFERENCE ONLY
SCOPE OF WORK ON THIS DRAWING IS A PART OF EARLY STRUCTURAL BID PACKAGE

© COPYRIGHT 2021 DRUMMEY ROSANE ANDERSON, INC.

MSBA 90% CD SUBMISSION

MAY 12, 2023

KEY PLAN

PROJECT NORTH

MAGNETIC NORTH

JOIST LOADING DIAGRAMS

Scale: As indicated
Job No.: 20202
Drawn By: EDG
Date: MAY 12, 2023

S5-0-2

JOIST NOTES:

1.) JOIST SEAT DEPTH VARIES (8" MIN) AT CENTERLINE OF BEARING. COORDINATE WITH TOP OF STEEL BEAM.

2.) IN ADDITION TO THE LOADS SHOWN IN THE DIAGRAMS, DESIGN JOISTS AT THE GYMNASIUM FOR CONCENTRATED LOADS FROM MOTORIZED GYMNASIUM CURTAIN BATTING CAGE AND BASKETBALL BACKSTOP SUPPORT POINTS. REFER TO THE ARCHITECTURAL AND CEILING DRAWINGS. REFER TO MANUFACTURERS INFORMATION FOR LOAD MAGNITUDES AND LOCATIONS.

3.) REFER TO SPECIFICATIONS FOR UPLIFT LOAD ON THE JOISTS. DO NOT USE DESIGN DEAD LOAD TO OFFSET UPLIFT LOADS. ONLY SELF WEIGHT OF THE JOIST AND METAL ROOF DECK CAN BE USED TO OFFSET ANY UPLIFT LOADS.

4.) DESIGN FOR MAXIMUM LIVE LOADS DEFLECTION OF L / 360.

5.) DESIGN ALL JOISTS FOR ADDITIONAL UPWARD LOAD OF 200 POUNDS AT FIRST PANEL POINT AT EACH END OF JOIST.

6.) IN ADDITION TO THE SLOPE, PROVIDE CAMBER PER SJI.

7.) JOIST DEPTH DESIGNATION INDICATED AT THE HIGHEST POINT (AT MID-SPAN).

8.) JOIST SHALL BE TOP CHORD, QUADRUPLE PITCHED UNDER-SLUNG JOIST. JOISTS ARE SYMMETRICAL ABOUT THE MIDSPAN.

9.) JOIST WEB CONFIGURATION IS BY JOIST SUPPLIER. WEB CONFIGURATION SHALL BE COMPATIBLE WITH MECHANICAL DUCT LAYOUT AND CATWALK SUPPORTS.

10.) JOIST MANUFACTURER SHALL DESIGN AND ACCOUNT FOR JOIST CAMBER AND JOIST DEFLECTION TO LIMIT DIFFERENTIAL DEFLECTION OF ADJACENT JOISTS TO ALLOW FOR PROPER INSTALLATION OF MULTIPLE SIPAN ROOF DECK WITHOUT FIELD CUTTING OF DECK. REDUCE CAMBER BY HALF AT JOISTS ADJACENT TOP STRUCTURAL STEEL FRAMING.

11.) ALIGN PANEL POINTS OF ALL JOISTS AS SHOWN IN JOIST PROFILES.

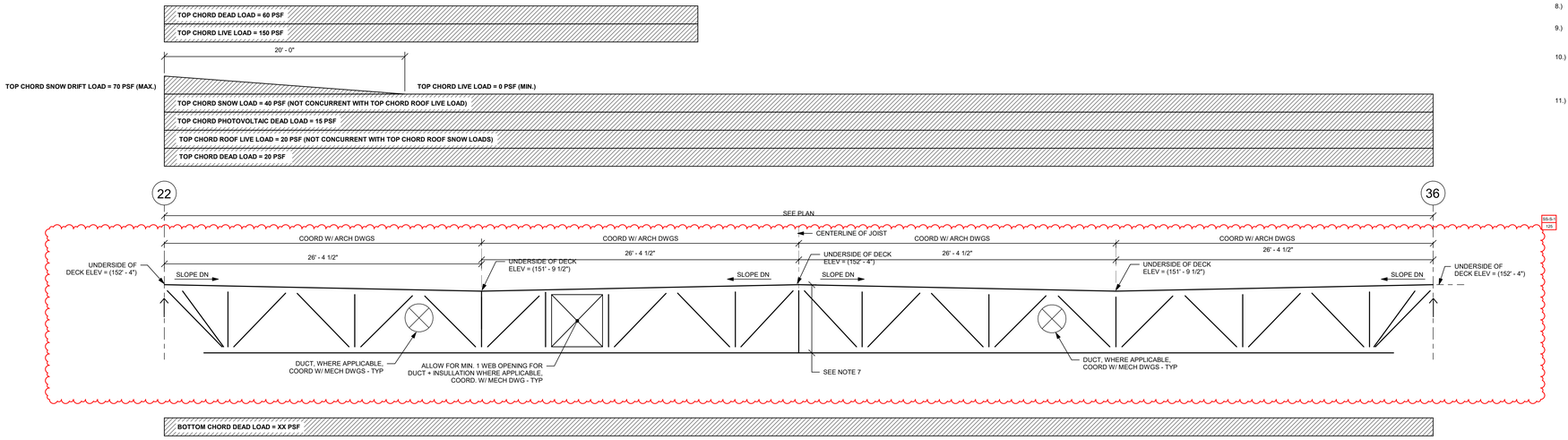

JOIST PROFILE AND LOAD DIAGRAM FOR 68DLHSP6

NOTE: SELF WEIGHT OF JOIST IS NOT INCLUDED IN LOADS

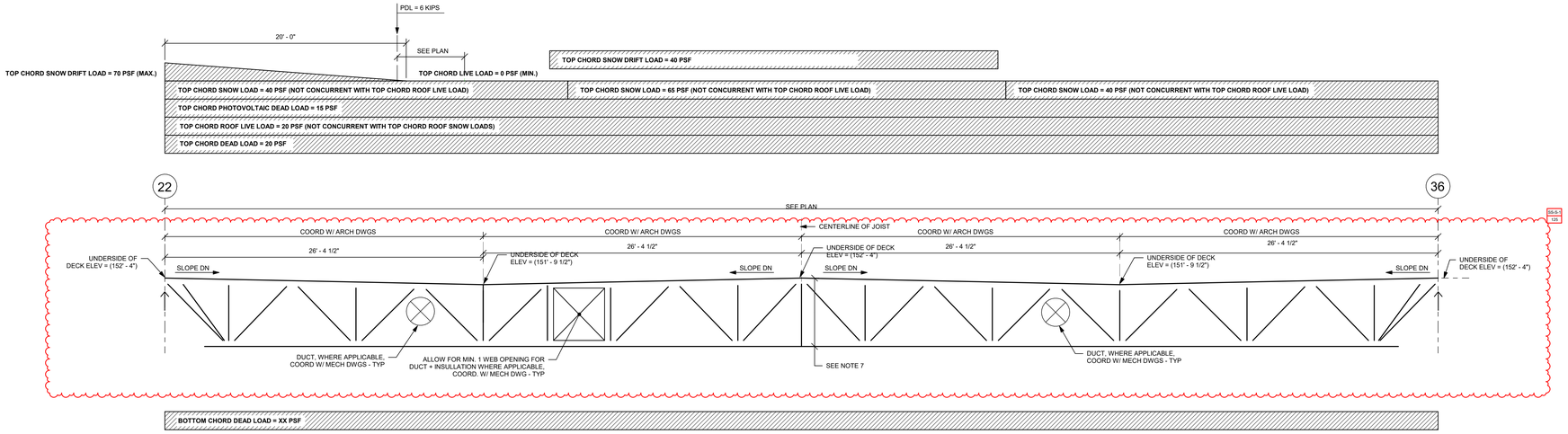

JOIST PROFILE AND LOAD DIAGRAM FOR 60DLHSP7

NOTE: SELF WEIGHT OF JOIST IS NOT INCLUDED IN LOADS

DRA

Drummey Rosane Anderson, Inc.

225 Oakland Road
Studio 205
South Windsor, CT
06074

260 Charles Street
Studio 300
Waltham, MA
02453

Planning | Architecture | Interior Design

Tel: 617.964.1700
www.draws.com

NORTHEAST METRO TECH

100 Hemlock Rd,
Wakefield, MA 01880

EDG

Engineers Design Group Inc.
Structural Engineers
389 Main Street, Suite 401
Malden, MA 02148
(781)396-9007
EDG@EDGINC.COM

REVISION LIST

SS-S-1	4/14/2023	STRUCTURAL STEEL ADDENDUM 1

FOR REFERENCE ONLY
SCOPE OF WORK ON THIS DRAWING IS A PART OF EARLY STRUCTURAL BID PACKAGE

© COPYRIGHT 2021 DRUMMEY ROSANE ANDERSON, INC.

MSBA 90% CD SUBMISSION

MAY 12, 2023

KEY PLAN

PROJECT NORTH | MAGNETIC NORTH

JOIST LOADING DIAGRAMS

Scale: As indicated
Job No.: 20202
Drawn By: EDG
Date: MAY 12, 2023

S5-0-3

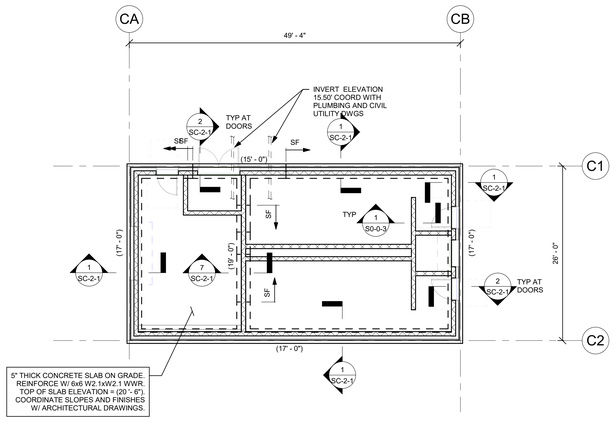

CONCESSION BUILDING GROUND FLOOR PLAN

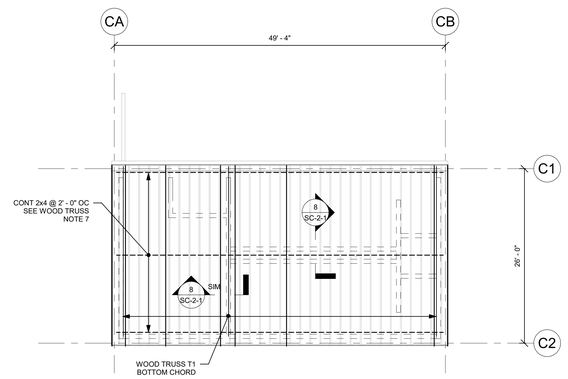

CONCESSION BUILDING CEILING PLAN

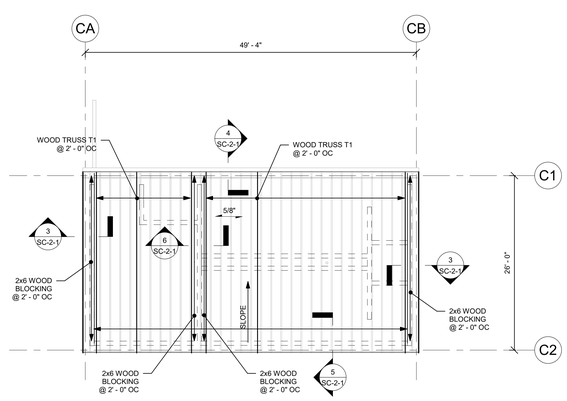

CONCESSION BUILDING ROOF PLAN

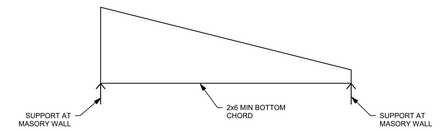

WOOD TRUSS TYPE T1

WOOD TRUSS NOTES:

1.) TRUSS CONFIGURATIONS ARE DIAGRAMMATIC AND NOT TO SCALE. SEE ARCHITECTURAL DRAWINGS FOR EXACT LENGTHS AND CONDITIONS.

2.) REVIEW MECHANICAL, ELECTRICAL AND PLUMBING DRAWINGS FOR ADDITIONAL EQUIPMENT LOADS.

3.) EXCEPT AS SHOWN OTHERWISE, DESIGN TRUSSES FOR THE FOLLOWING MINIMUM UNIFORM DESIGN LOADS:

TRUSS TYPE T1

TOP CHORD DEAD LOAD..... 15PSF
BOTTOM CHORD DEAD LOAD..... 5PSF
SNOW LOAD..... 30PSF
(SEE GENERAL NOTES ON S0-0-1 FOR WIND AND SEISMIC DESIGN CRITERIA)

4.) DESIGN AND PROVIDE ALL TEMPORARY ERECTION RESTRAINTS / BRACING.

5.) DESIGN AND PROVIDE ALL PERMANENT RESTRAINT / BRACING FOR WEB MEMBERS AS REQUIRED FOR A PERMANENT INSTALLATION.

6.) OSB STRUCTURAL USE SHEATHING PROVIDES PERMANENT BRACING FOR THE TOP CHORD WHERE SHOWN.

7.) PROVIDE CONTINUOUS 2x4 @ 2' - 0" ON CENTER (MAX.) FOR LATERAL BRACING OF TRUSS BOTTOM CHORD.

8.) IN ADDITION TO WOOD BLOCKING SHOWN ON PLANS, PROVIDE 2x BLOCKING BETWEEN TOP CHORD OF TRUSSES AT EACH PANEL POINT. 2x BLOCKING SIZE TO MATCH TOP CHORD OF TRUSS.

9.) WHERE TRUSSES ARE TO BE SUPPLIED IN MORE THAN ONE PIECE, OR HINGED, DESIGN AND PROVIDE ALL NECESSARY BRACING CONNECTIONS AND ACCESSORIES.

10.) REFER TO GENERAL NOTES ON DRAWING S0-0-1 FOR ADDITIONAL REQUIREMENTS.

11.) DESIGN AND PROVIDE UPLIFT CONNECTORS. CONNECTORS SHOWN ARE MINIMUM REQUIREMENTS.

OSB STUCTURAL PANEL NAILING SCHEDULE (EXCEPT AS NOTED OTHERWISE)	
AT PANEL EDGE BOUNDARIES	10d COMMON NAILS AT 6" OC
AT OTHER PANEL EDGES	10d COMMON NAILS AT 6" OC
AT INTERMEDIATE PANEL SUPPORTS	10d COMMON NAILS AT 10" OC

FRAMING NOTES:

1.) FOR GENERAL NOTES AND TYPICAL DETAILS SEE DRAWINGS S0-0-1, S0-0-2, S0-0-3, S0-0-4, S0-0-5 , S0-0-6, S0-0-7 AND S0-0-8.

2.) 5/8" INDICATES SPAN DIRECTION OF 5/8" ROOF SHEATHING. PROVIDE APA RATED STRUCTURAL SHEATHING EXPOSURE 1 PLYWOOD OR OSB.

3.) T1 ETC... INDICATES A PRE-FABRICATED WOOD TRUSS. SEE THIS DRAWING FOR TRUSS CONFIGURATION AND LOADING INFORMATION. MAXIMUM TRUSS SPACING EQUALS 2' - 0" ON CENTER.

4.) FOR DIMENSIONS AND ELEVATIONS NOT GIVEN REFER TO ARCHITECTURAL DRAWINGS.

FOUNDATION NOTES:

1.) REFER TO GRADING DRAWINGS FOR PLAN AND GRADE ELEVATIONS THE STRUCTURAL DRAWINGS USES A DATUM OF 100'- 0" AT THE MAIN FLOOR, WHICH CORRESPONDS TO 163.50' MEAN SEA LEVEL, AS SHOWN ON THE SITE AND CIVIL DRAWINGS.

2.) FOR GENERAL NOTES AND TYPICAL DETAILS SEE DRAWINGS S0-0-1, S0-0-2, S0-0-3, S0-0-4, S0-0-5 , S0-0-6, S0-0-7 AND S0-0-8.

3.) F3 ETC... INDICATES A FOOTING TYPE. FOR SIZE OF FOOTING AND REINFORCEMENT SEE SCHEDULE ON THIS DRAWING.

4.) TOP OF FOOTING ELEVATION TO BE 3' - 6" MINIMUM BELOW LOWEST ADJACENT FINISHED GRADE AT EXTERIOR CONDITIONS AND 2' - 0" BELOW TOP OF CONCRETE SLAB AT INTERIOR CONDITIONS. ALL OTHER TOP OF FOOTING ELEVATIONS ARE DENOTED AS THUS (XX' - XX") ON PLANS. CONTRACTOR TO COORDINATE AND VERIFY ALL TOP OF FOOTING ELEVATIONS WITH UNDERGROUND PLUMBING SUB-CONTRACTOR'S FIELD LAYOUT.

5.) ALL FOOTING ELEVATIONS NOTED ON PLAN ARE SHOWN ONLY TO ASSIST IN COORDINATION. ALL FOOTING ELEVATIONS MUST BE COORDINATED WITH STRUCTURAL REQUIREMENTS, TYPICAL DETAILS, ARCHITECTURAL, MECHANICAL, ELECTRICAL, AND PLUMBING DRAWINGS.

6.) SF INDICATES A STEPPED FOOTING REFER TO DETAIL1 ON DRAWING S0-0-2.

7.) FOR UNDER SLAB DRAINAGE AND WALL DRAINS, COORDINATE WITH ARCHITECTURAL, STRUCTURAL, CIVIL, AND PLUMBING DRAWINGS.

8.) INDICATES A DEPRESSED SLAB ON GRADE. REFER TO DETAILS 6 AND 7 ON DRAWING S0-0-2 COORDINATE ALL SLAB DEPRESSIONS WITH REQUIREMENTS ON ARCHITECTURAL DRAWINGS.

9.) FOR TYPICAL EXTERIOR DOOR DETAIL REFER TO DETAIL 6 ON DRAWING S0-0-3 AND RELEVANT SECTIONS.

10.) CMU OR INDICATES A CMU WALL. REFER TO TYPICAL DETAIL 3 ON DRAWING S0-0-4 FOR REINFORCEMENT AND DETAIL 4 ON DRAWING S0-0-6 FOR CONNECTIONS TO STEEL BEAMS AND CONCRETE SLABS AT THE TOP OF WALL FOR NON-STRUCTURAL WALLS. REFER TO RELEVANT SECTIONS FOR CONNECTIONS OF SHEAR WALLS TO THE STRUCTURE.

11.) FOR DIMENSIONS AND ELEVATIONS NOT GIVEN REFER TO ARCHITECTURAL DRAWINGS.

12.) INDICATES UNDERGROUND UTILITY LINES PLUMBING THROUGH CONCRETE FOUNDATION WALL TYPICAL. COORDINATE FOOTING ELEVATION WITH PIPE INVERTS AND TYPICAL STRUCTURAL DETAILS.

© COPYRIGHT 2021 DRUMMEY ROSANE ANDERSON, INC.

DRA
Drummey Rosane Anderson, Inc.
225 Oakland Road
Studio 205
South Windsor, CT
06074
260 Charles Street
Studio 300
Waltham, MA
02453
Planning | Architecture | Interior Design
Tel: 617.964.1700
www.draiwa.com

NORTHEAST METRO TECH

100 Hemlock Rd,
Wakefield, MA 01880

EDG
Engineers Design Group Inc.
Structural Engineers
389 Main Street, Suite 401
Malden, MA 02148
(781)396-9007
EDG@EDGINC.COM

REVISION LIST

FOR REFERENCE ONLY
SCOPE OF WORK ON THIS DRAWING IS A PART OF EARLY STRUCTURAL BID PACKAGE

MSBA 90% CD SUBMISSION

MAY 12, 2023

KEY PLAN

PROJECT NORTH

MAGNETIC NORTH

CONCESSION BUILDING PLANS

Scale: As indicated
Job No.: 20202
Drawn By: EDG
Date: MAY 12, 2023

SC-1-1

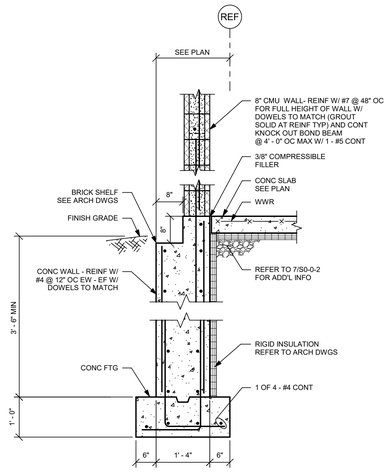

1

3/4" = 1' - 0"

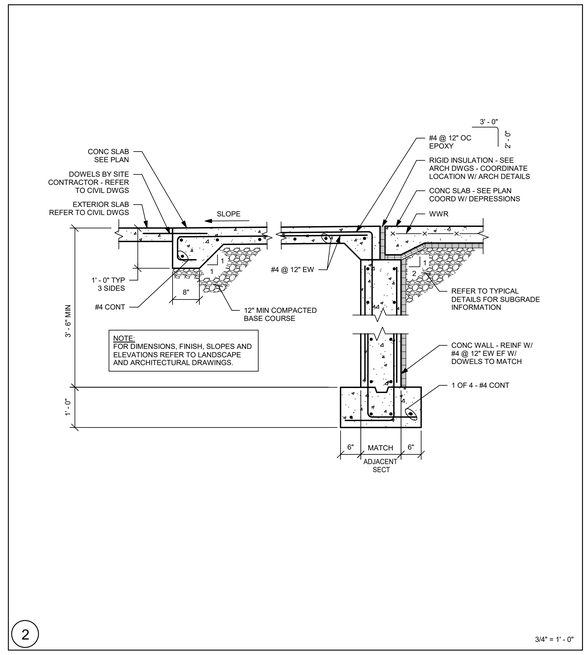

2

3/4" = 1' - 0"

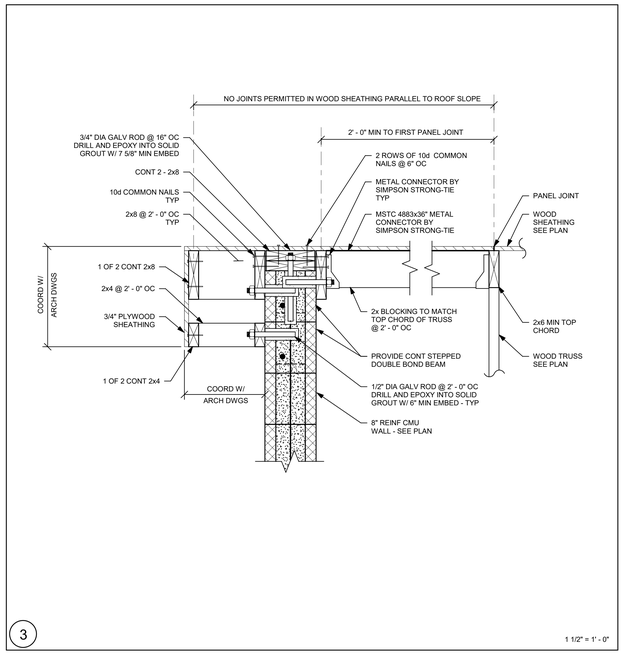

3

1 1/2" = 1' - 0"

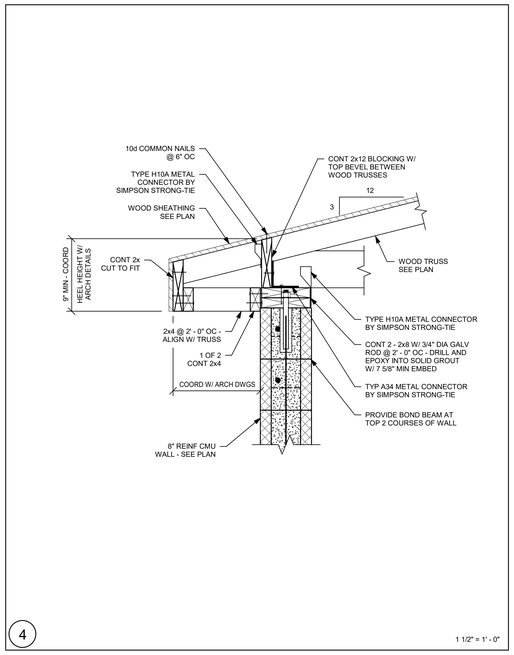

4

1 1/2" = 1' - 0"

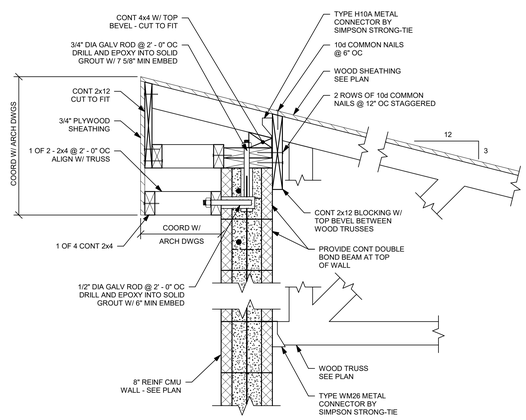

5

1 1/2" = 1' - 0"

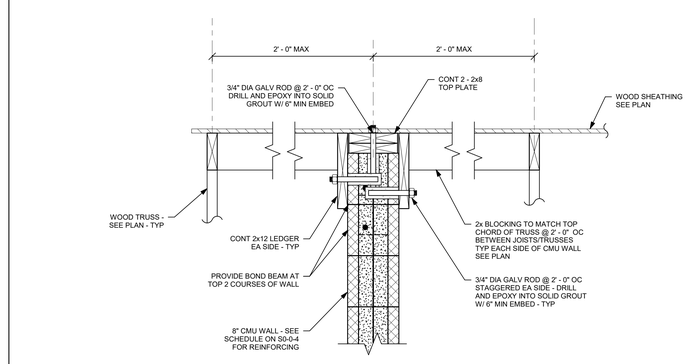

6

1 1/2" = 1' - 0"

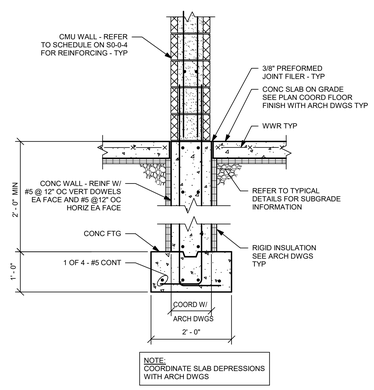

7

3/4" = 1' - 0"

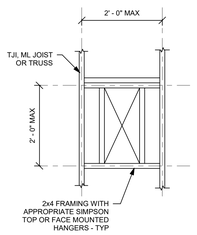

TYPICAL ROOF OPENING DETAIL

NOTE:
REFER TO ARCHITECTURAL, MECHANICAL, PLUMBING AND ELECTRICAL DRAWINGS FOR EXACT SIZE, QUANTITY AND LOCATION.

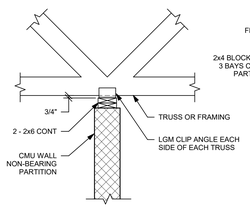

TYPICAL FRAMING AT NON-BEARING PARTITIONS DETAIL

NOTE:
PERPENDICULAR TO TRUSSES OR FRAMING. REFER TO ARCHITECTURAL DRAWINGS FOR WALL LOCATIONS.

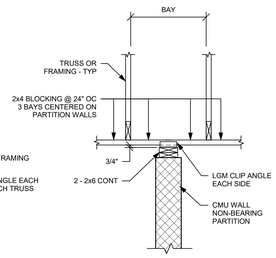

TYPICAL FRAMING AT NON-BEARING PARTITIONS DETAIL

NOTE:
PARALLEL TO TRUSSES OR FRAMING. REFER TO ARCHITECTURAL DRAWINGS FOR WALL LOCATIONS.

8

3/4" = 1' - 0"

9

3/4" = 1' - 0"

10

3/4" = 1' - 0"

DRA
Drummey Rosane Anderson, Inc.
225 Oakland Road Studio 205 South Windsor, CT 06074
260 Charles Street Studio 300 Waltham, MA 02453
Planning | Architecture | Interior Design
Tel: 617.964.1700
www.drawa.com

NORTHEAST METRO TECH

100 Hemlock Rd,
Wakefield, MA 01880

EDG
Engineers Design Group Inc.
Structural Engineers
389 Main Street, Suite 401
Malden, MA 02148
(781)396-9007
EDG@EDGINC.COM

REVISION LIST

© COPYRIGHT 2021 DRUMMEY ROSANE ANDERSON, INC.

FOR REFERENCE ONLY
SCOPE OF WORK ON THIS DRAWING IS A PART OF EARLY STRUCTURAL BID PACKAGE

MSBA 90% CD SUBMISSION

MAY 12, 2023

KEY PLAN

PROJECT NORTH | MAGNETIC NORTH

CONCESSION BUILDING SECTIONS

Scale: As indicated
Job No.: 20202
Drawn By: EDG
Date: MAY 12, 2023

SC-2-1

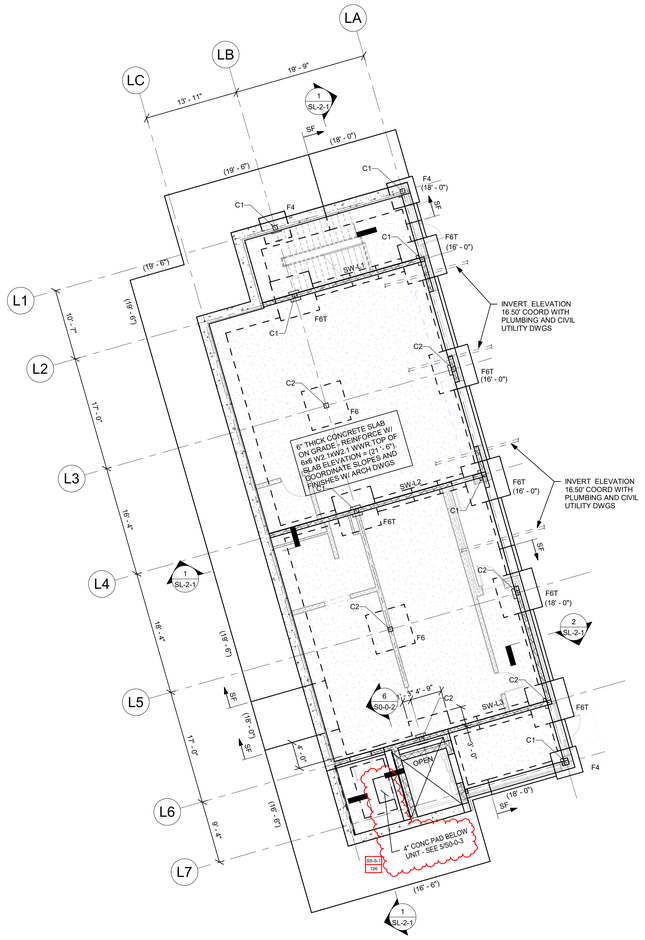

LOCKER BUILDING GROUND FLOOR PLAN

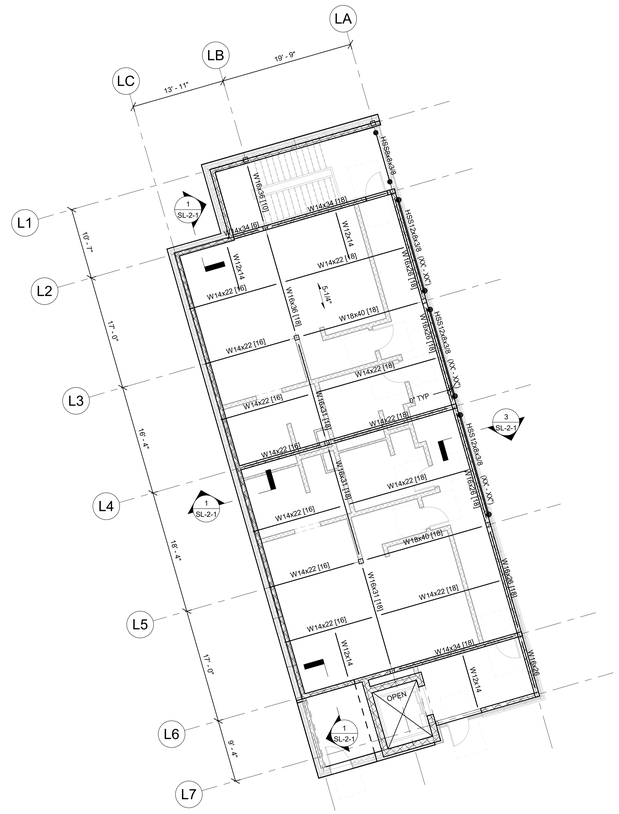

LOCKER BUILDING FIRST FLOOR PLAN

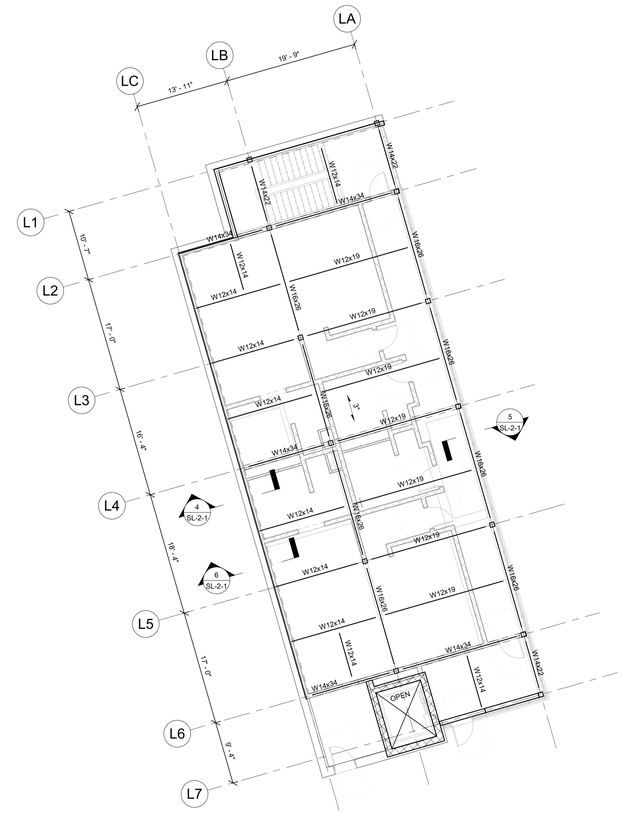

LOCKER BUILDING ROOF PLAN

FOUNDATION NOTES:

1.) REFER TO GRADING DRAWINGS FOR PLAN AND GRADE ELEVATIONS THE STRUCTURAL DRAWINGS USES A DATUM OF 100'- 0" AT THE MAIN FLOOR, WHICH CORRESPONDS TO 163.50' MEAN SEA LEVEL, AS SHOWN ON THE SITE AND CIVIL DRAWINGS.

2.) FOR GENERAL NOTES AND TYPICAL DETAILS SEE DRAWINGS S0-0-1, S0-0-2, S0-0-3, S0-0-4, S0-0-5 , S0-0-6, S0-0-7 AND S0-0-8.

3.) F3 ETC... INDICATES A FOOTING TYPE. FOR SIZE OF FOOTING AND REINFORCEMENT SEE SCHEDULE ON THIS DRAWING.

4.) TOP OF FOOTING ELEVATION TO BE 3' - 6" MINIMUM BELOW LOWEST ADJACENT FINISHED GRADE AT EXTERIOR CONDITIONS AND 2' - 0" BELOW TOP OF CONCRETE SLAB AT INTERIOR CONDITIONS. ALL OTHER TOP OF FOOTING ELEVATIONS ARE DENOTED AS THUS (XX' - XX") ON PLANS. CONTRACTOR TO COORDINATE AND VERIFY ALL TOP OF FOOTING ELEVATIONS WITH UNDERGROUND PLUMBING SUB-CONTRACTOR'S FIELD LAYOUT.

5.) ALL FOOTING ELEVATIONS NOTED ON PLAN ARE SHOWN ONLY TO ASSIST IN COORDINATION. ALL FOOTING ELEVATIONS MUST BE COORDINATED WITH STRUCTURAL REQUIREMENTS, TYPICAL DETAILS, ARCHITECTURAL, MECHANICAL, ELECTRICAL, AND PLUMBING DRAWINGS.

6.) ALL FOOTINGS TO BE CENTERED UNDER COLUMNS UNLESS NOTED OTHERWISE.

7.) SF → INDICATES A STEPPED FOOTING REFER TO DETAIL1 ON DRAWING S0-0-2.

9.) BOTTOM OF BASE PLATE ELEVATION TO BE 1' - 5" MINIMUM BELOW TOP OF CONCRETE SLAB AT INTERIOR CONDITIONS, AND 0' - 11" BELOW TOP OF CONCRETE SLAB AT EXTERIOR CONDITIONS. UNLESS NOTED OTHERWISE AS [XX' - XX"] REFER TO ARCHITECTURAL DRAWINGS FOR BRICK SHELF ELEVATIONS.

10.) FOR UNDER SLAB DRAINAGE AND WALL DRAINS, COORDINATE WITH ARCHITECTURAL, STRUCTURAL, CIVIL, AND PLUMBING DRAWINGS.

11.) INDICATES A DEPRESSED SLAB ON GRADE. REFER TO DETAILS 6 AND 7 ON DRAWING S0-0-2 COORDINATE ALL SLAB DEPRESSIONS WITH REQUIREMENTS ON ARCHITECTURAL DRAWINGS.

12.) FOR TYPICAL EXTERIOR DOOR DETAIL REFER TO DETAIL 6 ON DRAWING S0-0-3 AND RELEVANT SECTIONS.

13.) INDICATES A CMU WALL. REFER TO TYPICAL DETAIL 3 ON DRAWING S0-0-4 FOR REINFORCEMENT AND DETAIL 4 ON DRAWING S0-0-6 FOR CONNECTIONS TO STEEL BEAMS AND CONCRETE SLABS AT THE TOP OF WALL FOR NON-STRUCTURAL WALLS. REFER TO RELEVANT SECTIONS FOR CONNECTIONS OF SHEAR WALLS TO THE STRUCTURE.
OR
OR

14.) FOR DIMENSIONS AND ELEVATIONS NOT GIVEN REFER TO ARCHITECTURAL DRAWINGS.

15.) INDICATES CONCRETE PIER REFER TO TYPICAL DETAIL 5 ON DRAWING S0-0-2.

16.) INDICATES UNDERGROUND UTILITY LINES PLUMBING THROUGH CONCRETE FOUNDATION WALL TYPICAL. COORDINATE FOOTING ELEVATION WITH PIPE INVERTS AND TYPICAL STRUCTURAL DETAILS.

17.) CONCRETE PIER REINFORCING PER DETAIL 5 ON DRAWING S0-0-2 IS TO BE PROVIDED FOR ALL CONCRETE WALLS SUPPORTING COLUMNS. HORIZONTAL WALL REINFORCING MUST REMAIN CONTINUOUS.

FRAMING NOTES:

1.) FOR GENERAL NOTES AND TYPICAL DETAILS SEE DRAWINGS S0-0-1, S0-0-2, S0-0-3, S0-0-4, S0-0-5 , S0-0-6, S0-0-7 AND S0-0-8.

2.) REFER TO ARCHITECTURAL DRAWINGS FOR ELEVATIONS AND VERTICAL DIMENSIONS. PITCH ALL STEEL UNIFORMLY TO LOW POINTS AT THE COLUMNS AND BENT BEAMS AS SHOWN ON THE ARCHITECTURAL DRAWINGS.

3.) [XX] INDICATES THE NUMBER OF 3/4" DIAMETER x 3 1/2" LONG HEADED STUDS WELDED TO THE TOP FLANGE OF THE BEAM. SPACE STUDS EVENLY ALONG THE BEAM UNLESS NOTED OTHERWISE.

4.) INDICATES A MOMENT CONNECTION TO DEVELOP THE FULL CAPACITY OF THE MEMBER. REFER TO TYPICAL DETAILS 7, 8 AND 9 ON DRAWING ON DRAWING S0-0-6.

5.) INDICATES A 5/16" FILLET WELD ALL AROUND. (HSS BEAM TO HSS COLUMN) WHERE BEAM DIMENSIONS EXCEED COLUMN DIMENSIONS PROVIDE 1/2" THICK STEEL CAP PLATE TO ACHIEVE ALL AROUND WELD. REFER TO TYPICAL DETAIL 2 ON DRAWING S0-0-7.

6.) < X" > INDICATES UPWARD CAMBER AT THE MID-SPAN OF THE MEMBER.

7.) 4 1/2" INDICATES SPAN DIRECTION OF 2" DEEP, 20 GAGE GALVANIZED COMPOSITE STEEL DECK WITH 2 1/2" NORMAL WEIGHT CONCRETE TOPPING. TOTAL THICKNESS = 4 1/2". REINFORCE WITH 6x6 - W2.1xW2.1 WWR.

8.) 1 1/2" INDICATES SPAN DIRECTION OF 1 1/2" DEEP, 20 GAGE TYPE B, GALVANIZED STEEL ROOF DECK.

9.) 3" INDICATES SPAN DIRECTION OF 3" DEEP, 20 GAGE TYPE N, GALVANIZED STEEL ROOF DECK.

10.) FOR EXACT NUMBER, SIZE, AND LOCATION OF OPENING IN STEEL DECKING REFER TO MECHANICAL AND ARCHITECTURAL DRAWINGS. FOR FRAMING INFORMATION, REFER TO DETAIL 1 AND 2 ON DRAWING S0-0-8.

11.) ⊗ INDICATES A ROOF DRAIN. REFER TO TYPICAL STRUCTURAL DETAILS 1 AND 8 ON DRAWING S0-0-6 AND DETAIL 1 ON DRAWING S0-0-8. FOR DECKING SUPPORT, REFER TO DETAIL 4 ON DRAWING S0-0-5. REFER TO PLUMBING AND ARCHITECTURAL DRAWINGS FOR OPENING SIZES AND LOCATIONS.

12.) CT INDICATES A COLUMN TERMINATES AT THIS LEVEL.

13.) INDICATES A BEND IN THE STEEL BEAM. REFER TO TYPICAL DETAIL 8 ON DRAWING S0-0-8.

14.) WF INDICATES A CMU WALL. REFER TO TYPICAL DETAIL 3 ON DRAWING S0-0-4 FOR REINFORCEMENT AND DETAIL 4 ON DRAWING S0-0-6 FOR CONNECTIONS TO STEEL BEAMS AND CONCRETE SLABS AT THE TOP OF WALL FOR NON-STRUCTURAL WALLS. REFER TO RELEVANT SECTIONS FOR CONNECTIONS OF SHEAR WALLS TO THE STRUCTURE.
OR
OR

15.) FOR DIMENSIONS AND ELEVATIONS NOT GIVEN REFER TO ARCHITECTURAL DRAWINGS.

FOOTING SCHEDULE		
DESIGN SOIL BEARING CAPACITY = 2 TSF		
MARK	SIZE	REINFORCEMENT
F4	4' - 0" x 4' - 0" x 1' - 6"	6 - #5 BOT EA WAY
F6T	6' - 0" x 6' - 0" x 2' - 0"	7 - #6 BOT EA WAY
T INDICATES TOP REINFORCING TO MATCH BOTTOM REINFORCING		

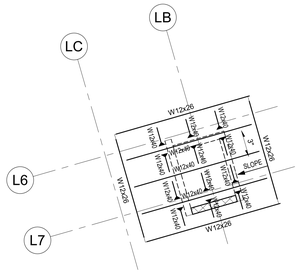

LOCKER BUILDING ELEVATOR ROOF PART PLAN

DRA
Drummey Rosane Anderson, Inc.
225 Oakland Road
Studio 205
South Windsor, CT
06074
260 Charles Street
Studio 300
Waltham, MA
02453
Planning | Architecture | Interior Design
Tel: 617.964.1700
www.draiwa.com

NORTHEAST METRO TECH

100 Hemlock Rd,
Wakefield, MA 01880

EDG
Engineers Design Group Inc.
Structural Engineers
389 Main Street, Suite 401
Malden, MA 02148
(781)396-9007
EDG@EDGINC.COM

REVISION LIST

SS-S-1	4/14/2023	STRUCTURAL STEEL ADDENDUM 1

© COPYRIGHT 2021 DRUMMEY ROSANE ANDERSON, INC.

FOR REFERENCE ONLY
SCOPE OF WORK ON THIS DRAWING IS A PART OF EARLY STRUCTURAL BID PACKAGE

MSBA 90% CD SUBMISSION

MAY 12, 2023

KEY PLAN

PROJECT NORTH | MAGNETIC NORTH

LOCKER BUILDING PLANS

Scale: 1/8" = 1'-0"
Job No.: 20202
Drawn By: EDG
Date: MAY 12, 2023

SL-1-1

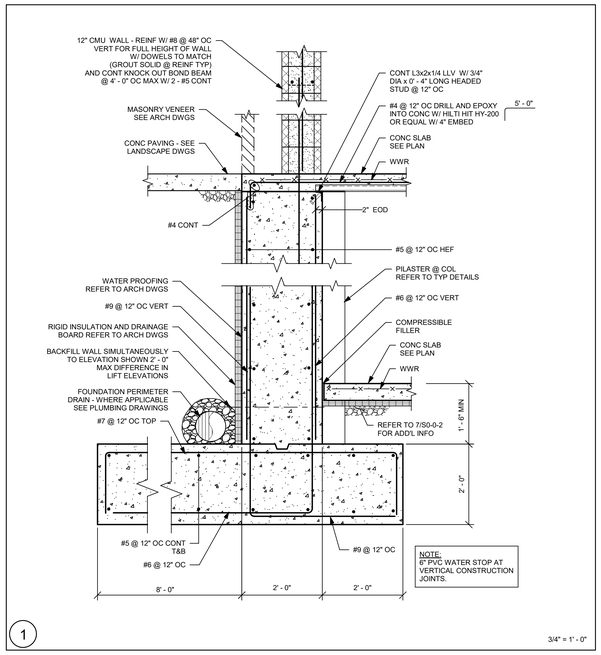

1 3/4" = 1' - 0"

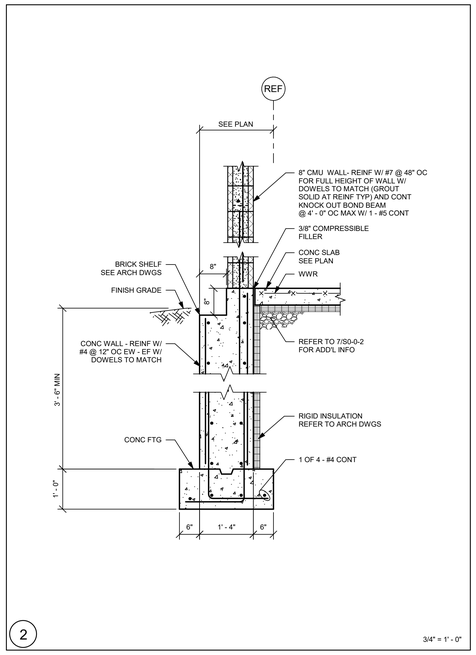

2 3/4" = 1' - 0"

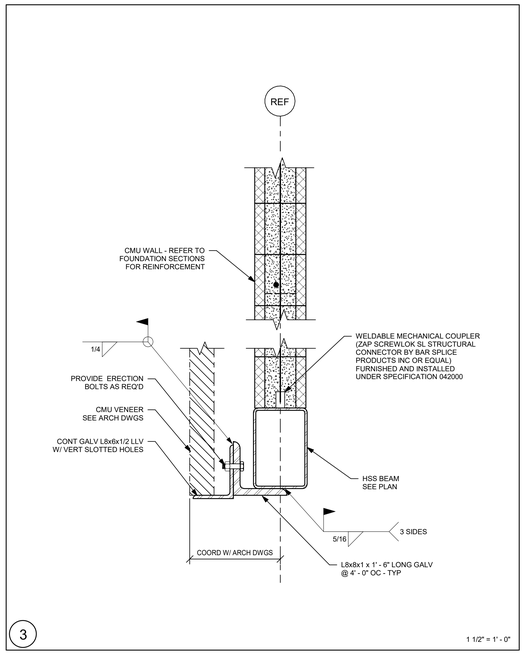

3 1 1/2" = 1' - 0"

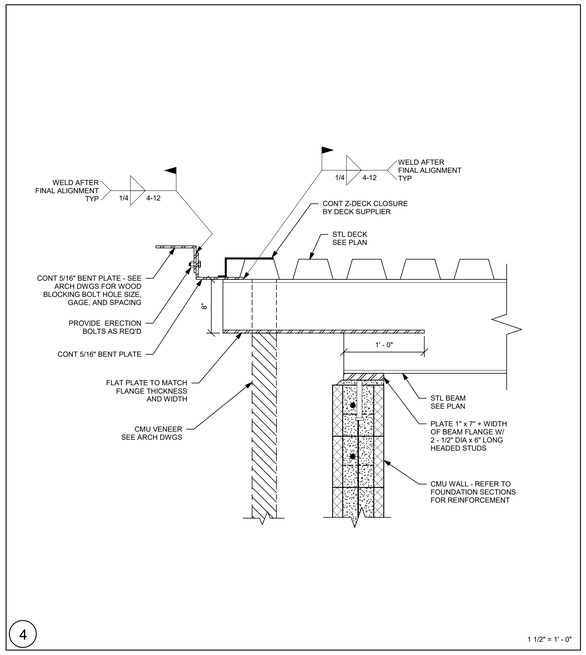

4 1 1/2" = 1' - 0"

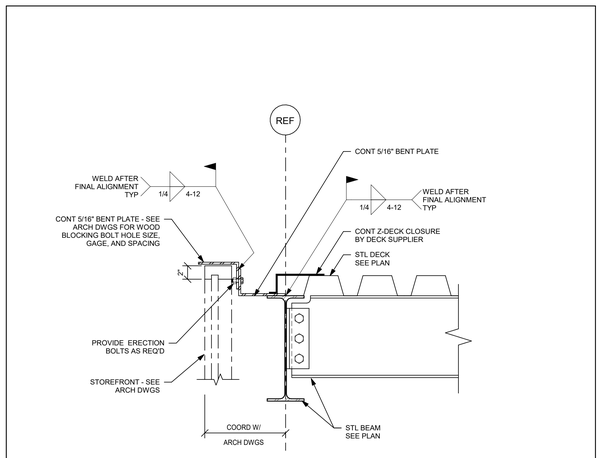

5 1 1/2" = 1' - 0"

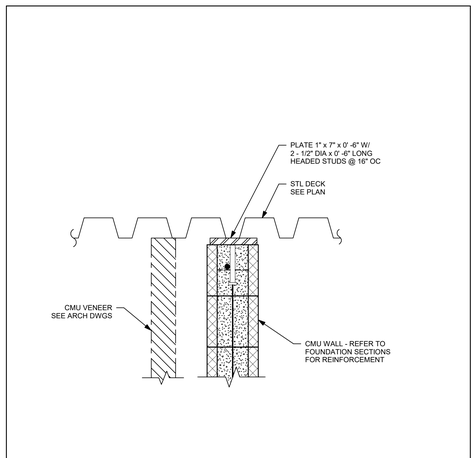

6 1 1/2" = 1' - 0"

7 3/4" = 1' - 0"

8 3/4" = 1' - 0"

9 3/4" = 1' - 0"

10 3/4" = 1' - 0"

11 3/4" = 1' - 0"

12 3/4" = 1' - 0"

DRA

Drummey Rosane Anderson, Inc.

225 Oakland Road
Studio 205
South Windsor, CT
06074

260 Charles Street
Studio 300
Waltham, MA
02453

Planning | Architecture | Interior Design

Tel: 617.964.1700
www.draiwa.com

NORTHEAST METRO TECH

100 Hemlock Rd,
Wakefield, MA 01880

EDG

Engineers Design Group Inc.
Structural Engineers
389 Main Street, Suite 401
Malden, MA 02148
(781)396-9007
EDG@EDGINC.COM

REVISION LIST

FOR REFERENCE ONLY
SCOPE OF WORK ON THIS DRAWING IS A PART OF EARLY STRUCTURAL BID PACKAGE

© COPYRIGHT 2021 DRUMMEY ROSANE ANDERSON, INC.

MSBA 90% CD SUBMISSION

MAY 12, 2023

KEY PLAN

PROJECT NORTH | MAGNETIC NORTH

LOCKER ROOM BUILDING SECTIONS

Scale: As indicated
Job No.: 20202
Drawn By: EDG
Date: MAY 12, 2023

SL-2-1

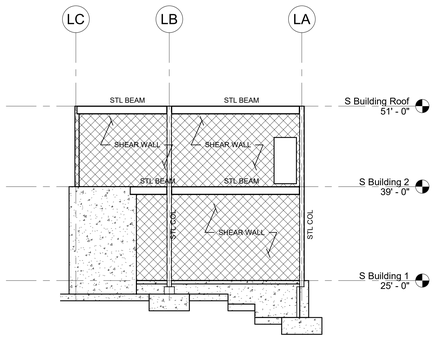

SW-L1
ALONG GRIDLINE L2

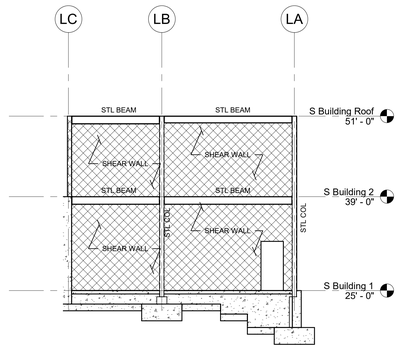

SW-L2
ALONG GRIDLINE L4

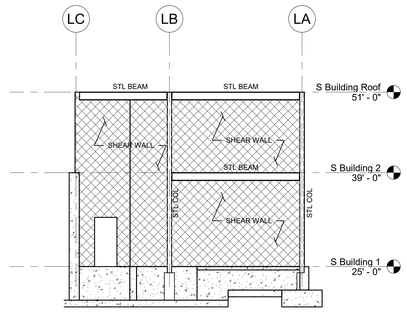

SW-L3
ALONG GRIDLINE L6

DRA
Drummey Rosane Anderson, Inc.
225 Oakland Road
Studio 205
South Windsor, CT
06074
260 Charles Street
Studio 300
Waltham, MA
02453
Planning | Architecture | Interior Design
Tel: 617.964.1700
www.draiwa.com

NORTHEAST METRO TECH

100 Hemlock Rd,
Wakefield, MA 01880

EDG
Engineers Design Group Inc.
Structural Engineers
389 Main Street, Suite 401
Malden, MA 02148
(781)396-9007
EDG@EDGINC.COM

REVISION LIST

FOR REFERENCE ONLY
SCOPE OF WORK ON THIS DRAWING IS A PART OF EARLY STRUCTURAL BID PACKAGE

© COPYRIGHT 2021 DRUMMEY ROSANE ANDERSON, INC.

MSBA 90% CD
SUBMISSION

MAY 12, 2023

KEY PLAN

PROJECT NORTH

MAGNETIC NORTH

LOCKER ROOM BUILDING SHEAR WALLS

Scale: 1/8" = 1'-0"
Job No.: 20202
Drawn By: EDG
Date: MAY 12, 2023

SL-3-1

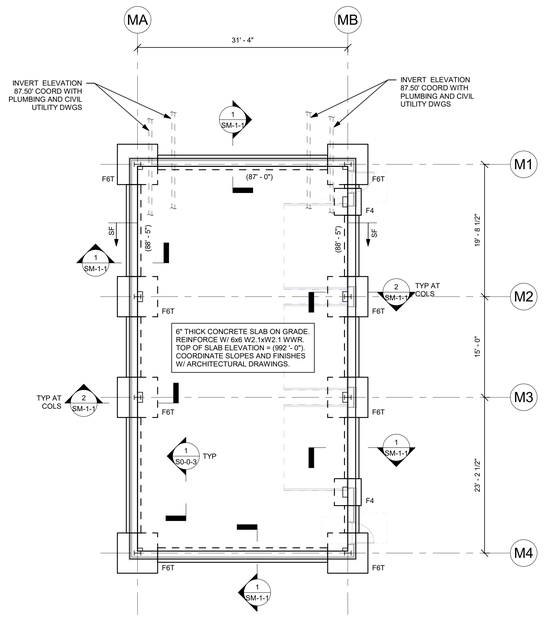

MAINTENANCE BUILDING GROUND FLOOR PLAN

FOUNDATION NOTES:

1.) REFER TO GRADING DRAWINGS FOR PLAN AND GRADE ELEVATIONS THE STRUCTURAL DRAWINGS USES A DATUM OF 100'- 0" AT THE MAIN FLOOR, WHICH CORRESPONDS TO 163.50' MEAN SEA LEVEL, AS SHOWN ON THE SITE AND CIVIL DRAWINGS.

2.) FOR GENERAL NOTES AND TYPICAL DETAILS SEE DRAWINGS S0-0-1, S0-0-2, S0-0-3, S0-0-4, S0-0-5 , S0-0-6, S0-0-7 AND S0-0-8.

3.) F3 ETC... INDICATES A FOOTING TYPE, FOR SIZE OF FOOTING AND REINFORCEMENT SEE SCHEDULE ON THIS DRAWING.

4.) TOP OF FOOTING ELEVATION TO BE 3' - 6" MINIMUM BELOW LOWEST ADJACENT FINISHED GRADE AT EXTERIOR CONDITIONS AND 2' - 0" BELOW TOP OF CONCRETE SLAB AT INTERIOR CONDITIONS. ALL OTHER TOP OF FOOTING ELEVATIONS ARE DENOTED AS THUS (XX' - XX") ON PLANS. CONTRACTOR TO COORDINATE AND VERIFY ALL TOP OF FOOTING ELEVATIONS WITH UNDERGROUND PLUMBING SUB-CONTRACTOR'S FIELD LAYOUT.

5.) ALL FOOTING ELEVATIONS NOTED ON PLAN ARE SHOWN ONLY TO ASSIST IN COORDINATION. ALL FOOTING ELEVATIONS MUST BE COORDINATED WITH STRUCTURAL REQUIREMENTS, TYPICAL DETAILS, ARCHITECTURAL, MECHANICAL, ELECTRICAL, AND PLUMBING DRAWINGS.

6.) ALL FOOTINGS TO BE CENTERED UNDER COLUMNS UNLESS NOTED OTHERWISE.

7.) SF → INDICATES A STEPPED FOOTING REFER TO DETAIL1 ON DRAWING S0-0-2.

9.) BOTTOM OF BASE PLATE ELEVATION TO BE 1' - 5" MINIMUM BELOW TOP OF CONCRETE SLAB AT INTERIOR CONDITIONS, AND 0' - 11" BELOW TOP OF CONCRETE SLAB AT EXTERIOR CONDITIONS. UNLESS NOTED OTHERWISE AS [XX' - XX"] REFER TO ARCHITECTURAL DRAWINGS FOR BRICK SHELF ELEVATIONS.

10.) FOR UNDER SLAB DRAINAGE AND WALL DRAINS, COORDINATE WITH ARCHITECTURAL, STRUCTURAL, CIVIL, AND PLUMBING DRAWINGS.

11.) INDICATES A DEPRESSED SLAB ON GRADE. REFER TO DETAILS 6 AND 7 ON DRAWING S0-0-2 COORDINATE ALL SLAB DEPRESSIONS WITH REQUIREMENTS ON ARCHITECTURAL DRAWINGS.

12.) FOR TYPICAL EXTERIOR DOOR DETAIL REFER TO DETAIL 6 ON DRAWING S0-0-3 AND RELEVANT SECTIONS.

13.) INDICATES A CMU WALL. REFER TO TYPICAL DETAIL 3 ON DRAWING S0-0-4 FOR REINFORCEMENT AND DETAIL 4 ON DRAWING S0-0-6 FOR CONNECTIONS TO STEEL BEAMS AND CONCRETE SLABS AT THE TOP OF WALL FOR NON-STRUCTURAL WALLS. REFER TO RELEVANT SECTIONS FOR CONNECTIONS OF SHEAR WALLS TO THE STRUCTURE.
OR
OR

14.) FOR DIMENSIONS AND ELEVATIONS NOT GIVEN REFER TO ARCHITECTURAL DRAWINGS.

15.) INDICATES CONCRETE PIER REFER TO TYPICAL DETAIL 5 ON DRAWING S0-0-2.

16.) INDICATES UNDERGROUND UTILITY LINES PLUMBING THROUGH CONCRETE FOUNDATION WALL TYPICAL. COORDINATE FOOTING ELEVATION WITH PIPE INVERTS AND TYPICAL STRUCTURAL DETAILS.

FOOTING SCHEDULE		
DESIGN SOIL BEARING CAPACITY = 2 TSF		
MARK	SIZE	REINFORCEMENT
F4	4' - 0" x 4' - 0" x 1' - 6"	6 - #5 BOT EA WAY
F6T	6' - 0" x 6' - 0" x 2' - 0"	7 - #6 BOT EA WAY
T INDICATES TOP REINFORCING TO MATCH BOTTOM REINFORCING		

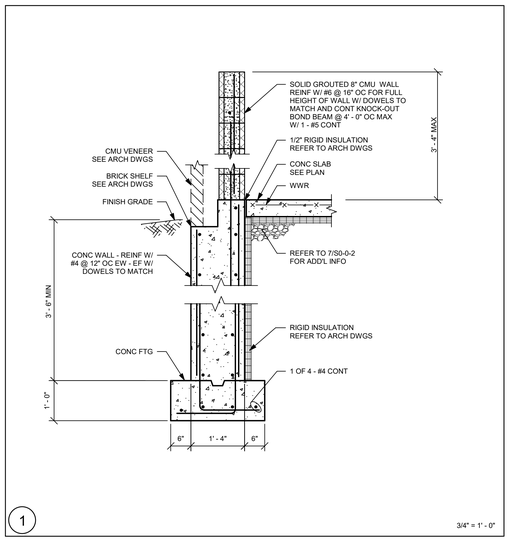

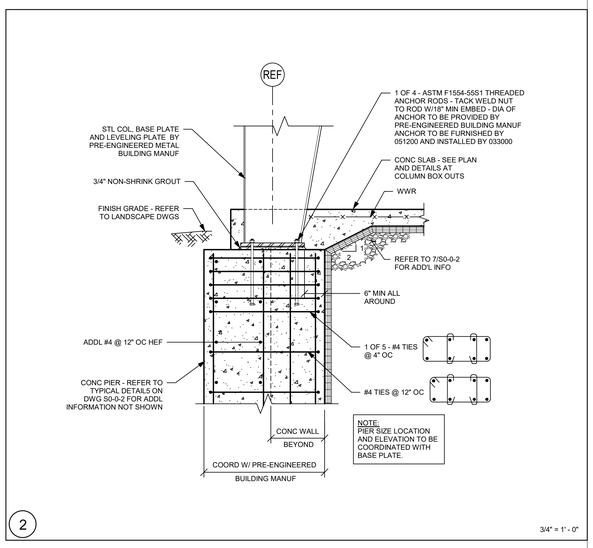

DRA
Drummey Rosane Anderson, Inc.
225 Oakland Road
Studio 205
South Windsor, CT
06074
260 Charles Street
Studio 300
Waltham, MA
02453
Planning | Architecture | Interior Design
Tel: 617.964.1700
www.draws.com

NORTHEAST METRO TECH

100 Hemlock Rd,
Wakefield, MA 01880

EDG
Engineers Design Group Inc.
Structural Engineers
389 Main Street, Suite 401
Malden, MA 02148
(781)396-9007
EDG@EDGINC.COM

REVISION LIST

FOR REFERENCE ONLY
SCOPE OF WORK ON THIS DRAWING
IS A PART OF EARLY STRUCTURAL
BID PACKAGE

© COPYRIGHT 2021 DRUMMEY ROSANE ANDERSON, INC.

MSBA 90% CD
SUBMISSION

MAY 12, 2023

KEY PLAN

PROJECT NORTH

MAGNETIC NORTH

MAINTENANCE BUILDING PLANS

Scale: As indicated
Job No.: 20202
Drawn By: EDG
Date: MAY 12, 2023

SM-1-1

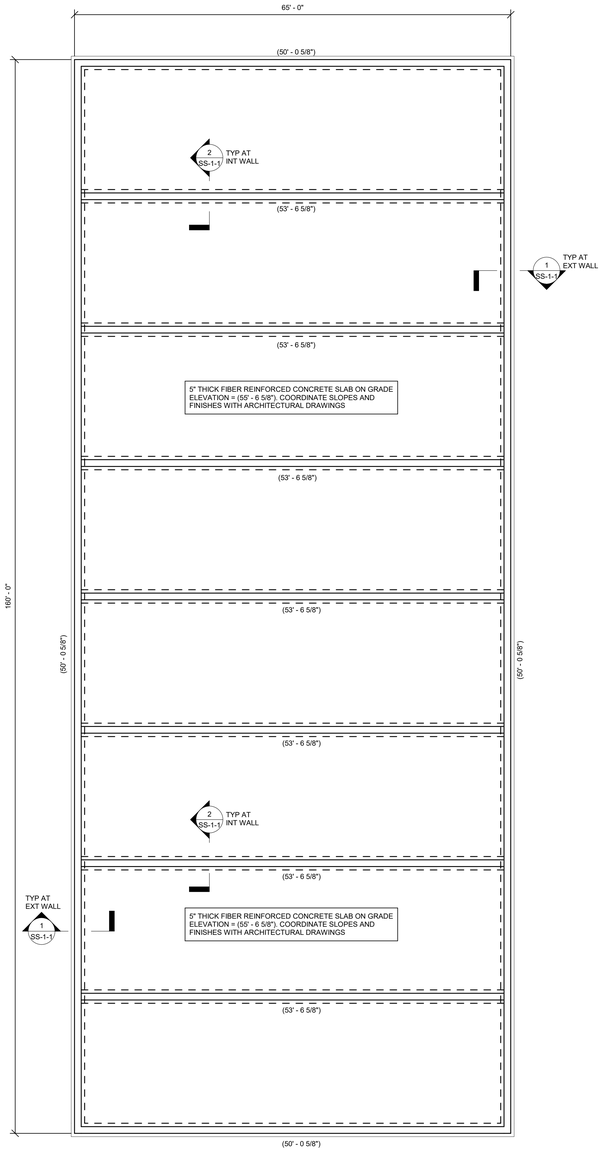

STORAGE BUILDING FOUNDATION PLAN

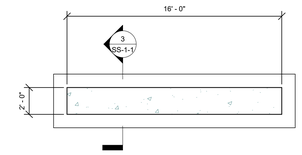

SIGNAGE FOUNDATION PLAN

SCALE: 1/4" = 1' - 0"

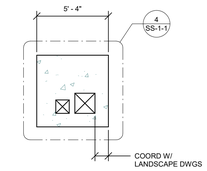

TRANSFORMER PAD 1 PLAN

SCALE: 1/4" = 1' - 0"

NOTE:
3 REQUIRED. COORDINATE LOCATIONS WITH ARCHITECTURAL AND LANDSCAPE DRAWINGS.

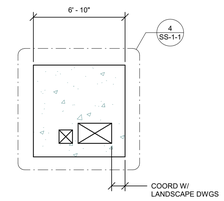

TRANSFORMER PAD 2 PLAN

SCALE: 1/4" = 1' - 0"

NOTE:
2 REQUIRED. COORDINATE LOCATIONS WITH ARCHITECTURAL AND LANDSCAPE DRAWINGS.

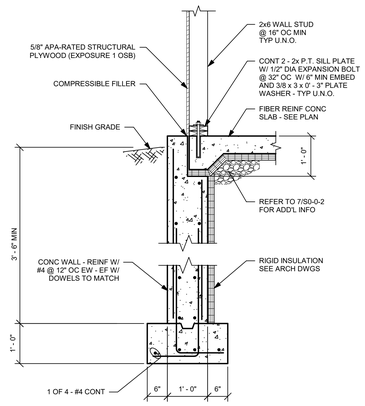

1

3/4" = 1' - 0"

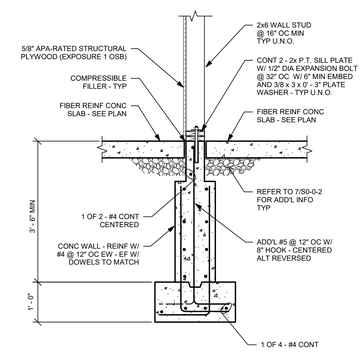

2

3/4" = 1' - 0"

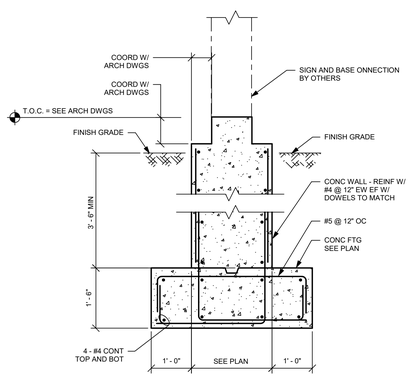

SITE SIGNAGE BASE

NOTE:
LOCATION AND DIMENSIONS OF SIGN TO BE COORDINATED WITH ARCHITECTURAL AND LANDSCAPE DRAWINGS

3

3/4" = 1' - 0"

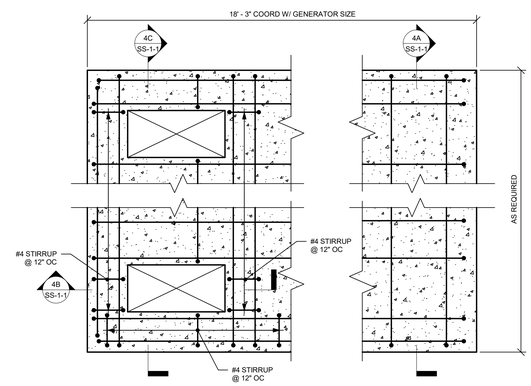

EXTERIOR PAD PLAN AND DETAILS

NOTES:

1.) REFER TO MECHANICAL AND ELECTRICAL DRAWINGS FOR ADDITIONAL INFORMATION.

2.) PAD DIMENSIONS ARE APPROXIMATE. COORDINATE WITH MECHANICAL, ELECTRICAL, AND LANDSCAPE DRAWINGS.

3.) REFER TO SITE, MECHANICAL AND ELECTRICAL DRAWINGS FOR LOCATION AND ADDITIONAL INFORMATION.

4.) TOP AND BOTTOM BARS SHALL BE CONTINUOUS LAP SPLICE LENGTH = 58".

5.) 28 DAY CONCRETE COMPRESSIVE STRENGTH SHALL BE 5,000 PSI.

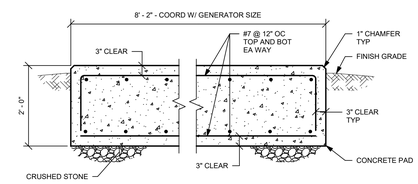

DETAIL 4A

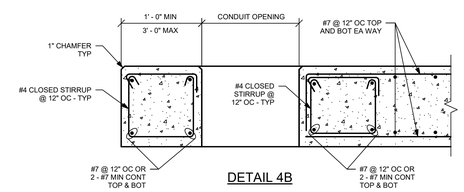

DETAIL 4B

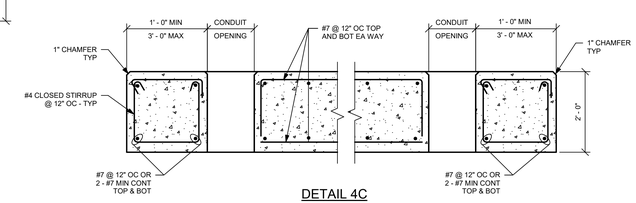

DETAIL 4C

4

3/4" = 1' - 0"

DRA

Drummey Rosane Anderson, Inc.

225 Oakland Road
Studio 205
South Windsor, CT
06074

260 Charles Street
Studio 300
Waltham, MA
02453

Planning | Architecture | Interior Design

Tel: 617.964.1700
www.draiwa.com

NORTHEAST METRO TECH

100 Hemlock Rd,
Wakefield, MA 01880

EDG
Engineers Design Group Inc.
Structural Engineers
389 Main Street, Suite 401
Malden, MA 02148
(781)396-9007
EDG@EDGINC.COM

REVISION LIST

© COPYRIGHT 2021 DRUMMEY ROSANE ANDERSON, INC.

FOR REFERENCE ONLY
SCOPE OF WORK ON THIS DRAWING IS A PART OF EARLY STRUCTURAL BID PACKAGE

MSBA 90% CD SUBMISSION

MAY 12, 2023

KEY PLAN

PROJECT NORTH

MAGNETIC NORTH

MAINTENANCE SITE BUILDING FOUNDATION PLANS

Scale: As indicated
Job No.: 20202
Drawn By: EDG
Date: MAY 12, 2023

SS-1-1